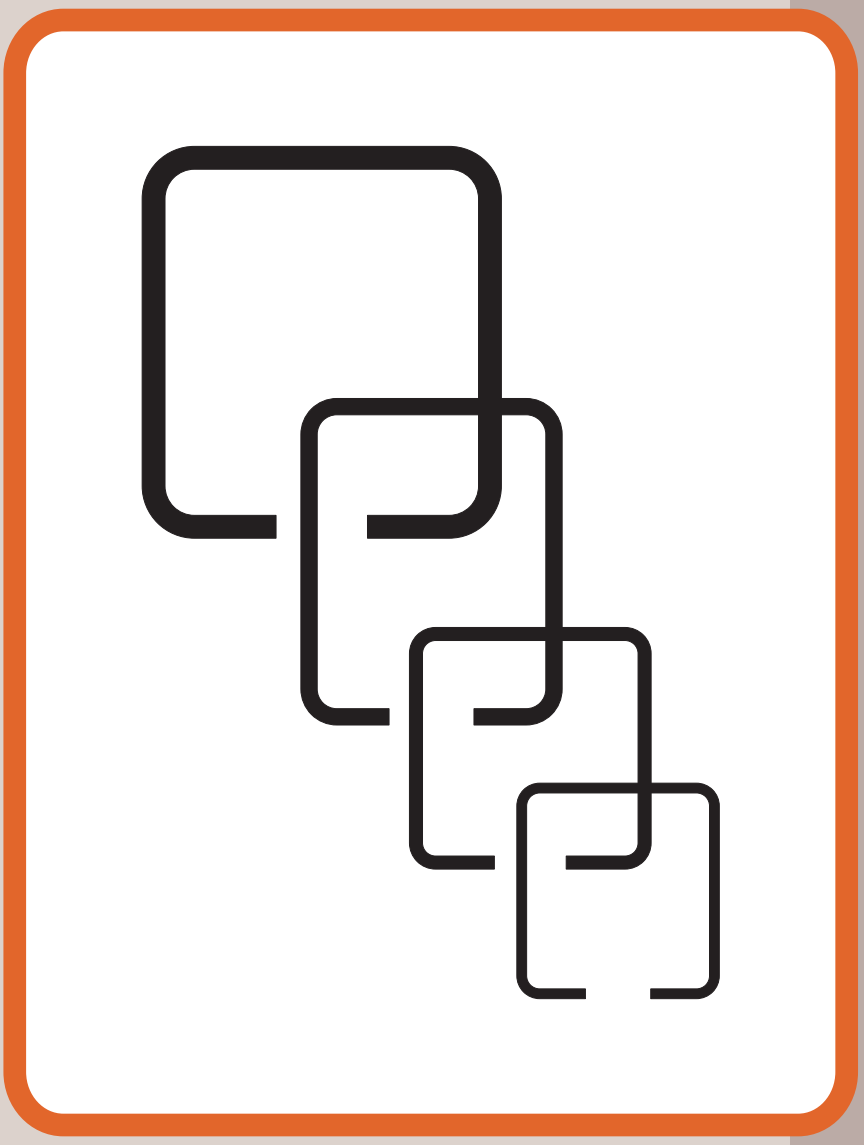

MONORAIL SYSTEMS

RAILTECHNIEK VAN HERWIJNEN BV

SPECIALISTS IN OVERHEAD CONVEYORS

Flowcoat

Bridge Crane

INDEX

Track	*2*
Load Diagram	*5*
Practical Values	*6*
Monorail	*7*
Bends	*8*
Switches	*10*
Turntables	*17*
Switch Combinations	*18*
Loadbar	*20*
Brackets	*21*
Monorail Interrupter	*25*
Expansion Devices	*27*
End Caps And Stopper	*28*
Electric Lift-Lower Device	*38*
End Lift-Lower Device	*42*
Coupling Bridge Crane	*44*
Semi Automated Systems	*45*
Transfers	*46*
Bridge Cranes	*48*
Cable Guidance	*49*
Our Devisions	*50*

Monorail

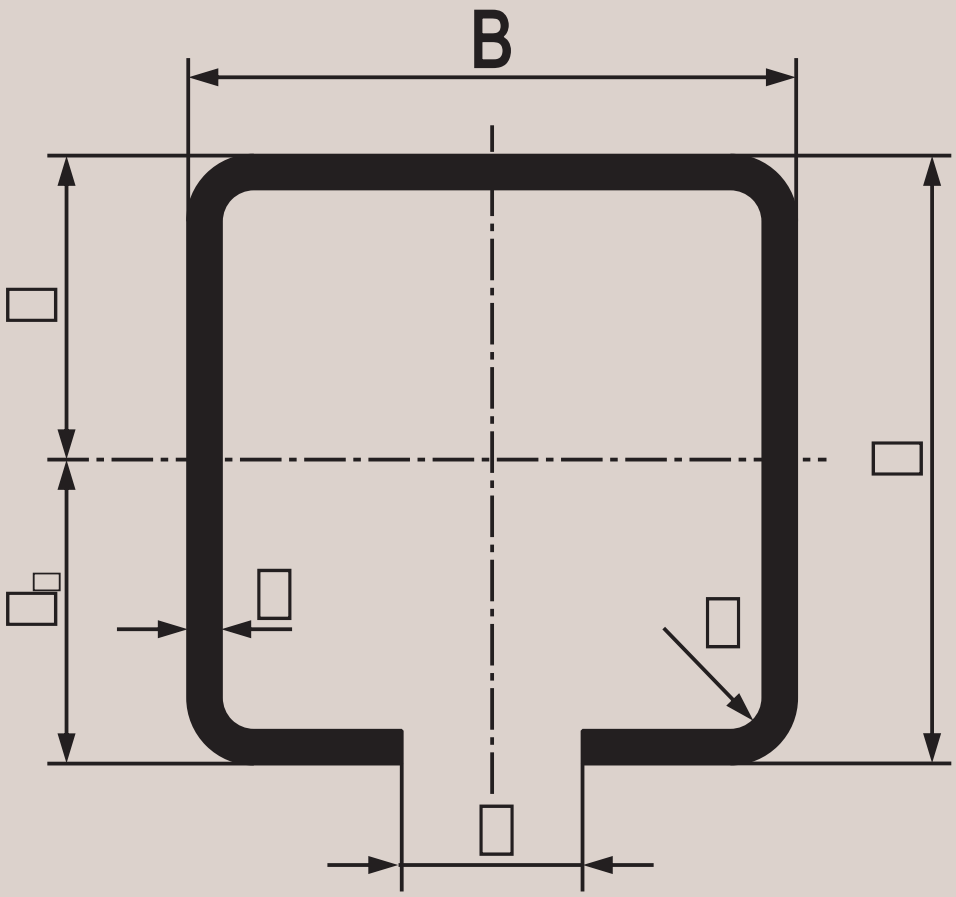

□□□e o□
trac□□

	sizes A x B x C mm	weight kg/m	S cm^2	Ix cm^4	V_1 cm	V cm	$\frac{Ix}{V}$ cm^3	Z mm	r mm
230.000	66 x 62 x 3	4.98	6.38	36	3.60	3.00	10.0	20	4
2□0.000	74 x 74 x 4	7.67	9.84	72.5	4.01	3.40	18.0	22	4
2□0.000	100 x 80 x 5	11.55	14.80	186	5.39	4.61	34.5	26	6
2□0.000	120 x 110 x 7	26.78	20.89	501	5.6	6.4	78	28	9

Type of tracks

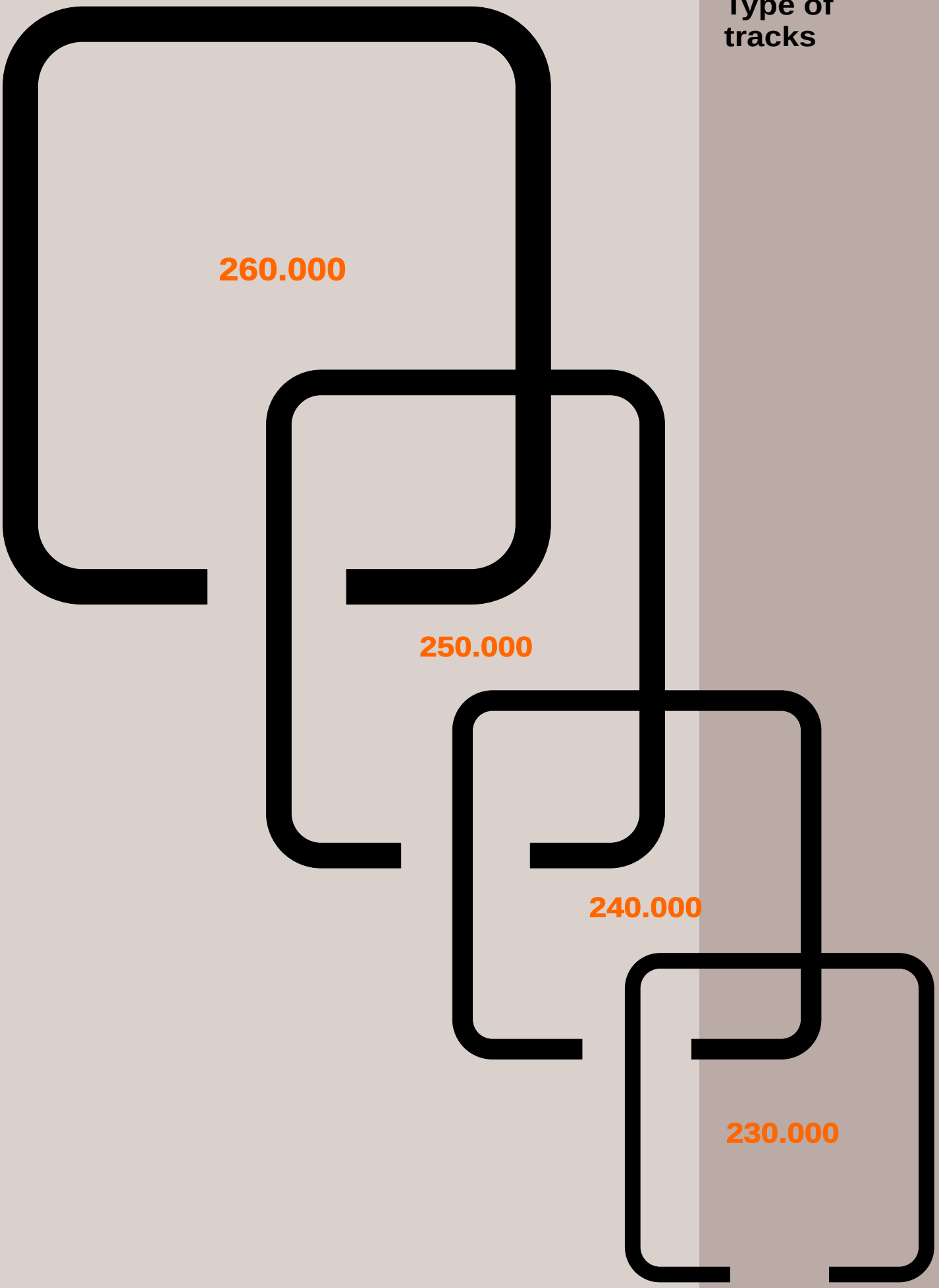

□□□e

The special cold rolled monorail tracks are available in 4 sizes, each is indicated by 6 figures:
230.000, 240.000, 250.000 and 260.000 .
The standard lengths are 6 m. Intermediate lengths are also available. In a monorail project all tracks are cut to the exact dimensions.

E□ec□tion

The tracks can be supplied in three different finishes:

1. The track is painted and not drilled.
In this case the second series of 3 figures is indicated by: ...000...
2. The track is painted, drilled and tapped (at both sides) for a jointing bracket. In this case the second series of 3 figures is indicated by: ...100...
3. The track is painted, drilled and tapped (at both sides) for a connecting piece. In this case the second series of 3 figures is indicated by: ...300...

□□□□□□□□□□□□

The tracks are indicated by a number of 9 figures.
The first series of 3 figures indicates the track type: 250... ...
The second series of 3 figures indicates the finishing:... 100 ...
The third series of 3 figures indicates the length: 300

E□a□ □le o□order

	250	100	300
The type of track is 250.000	↑		
The track is painted, drilled and tapped for a connection		↑	
The length of the track is 3 m			↑

Fini□□

In the standard execution the tracks are supplied with an orange premium finish coating RAL 9006. The tracks can be supplied in other colours.
By request the tracks can be supplied galvanized (hot dipped), metallized or with an epoxy coating.

□□□□ □□□□□□

The tracks type 230.000 and 240.000 are also available sendzimir galvanized. In this case the second array of three numbers is indicated by: ...001... .

Static load Fs with deflection f = 1/400 x Xs or f = 1/500 x Xs and a max. deflection stress of 1000 kg/cm^2, taking into account the deflection due to the track's own weight.

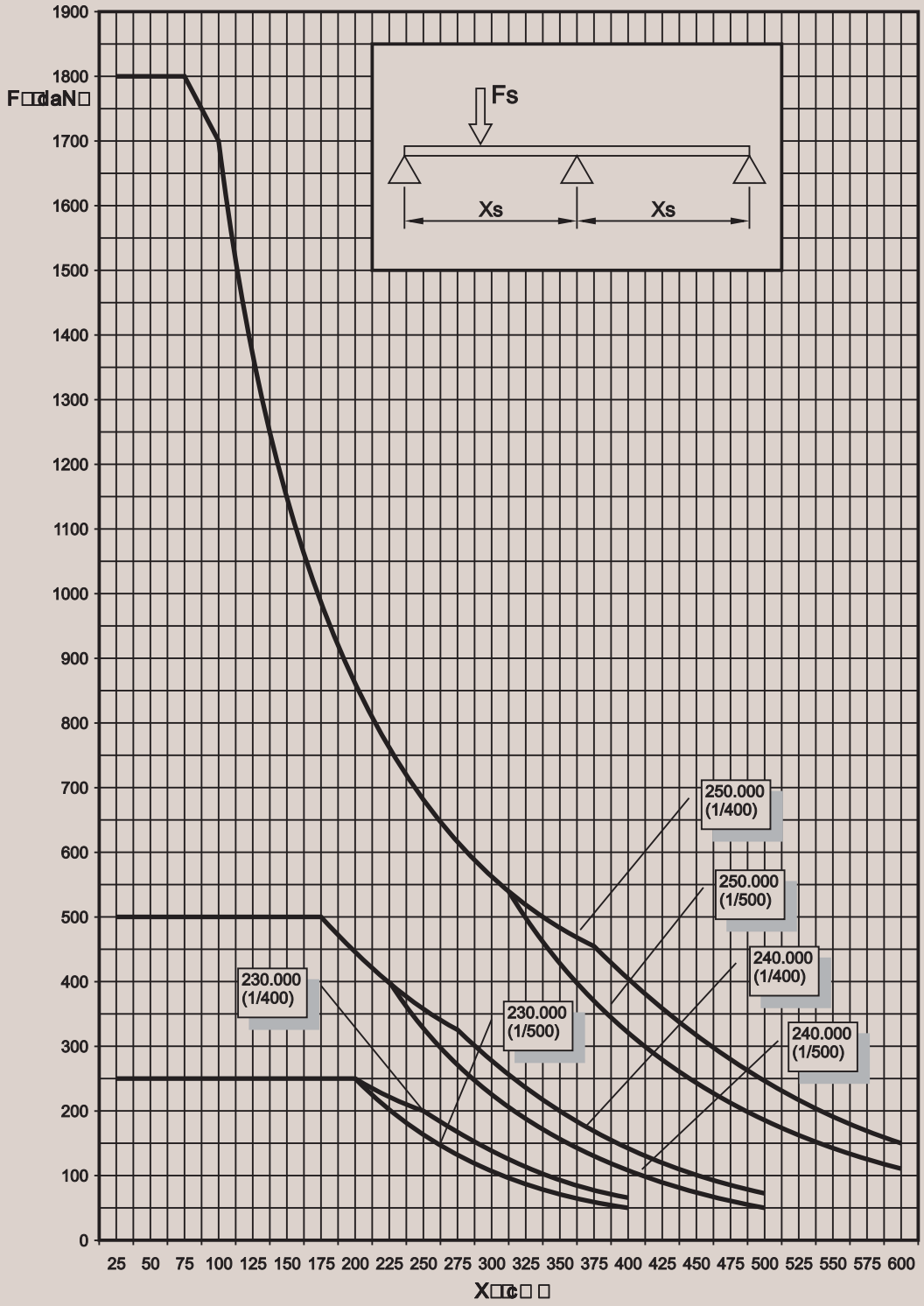

In the table are some practical values of the maximum carrying capacity F in kg and for the equally divided load Q in kg/m as a function of the distance between brackets Xs in mm.
These values apply for monorail applications.

Distance between brackets = Xs	230.000		240.000		250.000	
	F	Q	F	Q	F	Q
500	–	–	–	–	1800	1800
660	–	–	–	–	1400	1400
750	–	–	–	–	1200	1200
1000	250	250	500	500	1000	1000
1200	210	220	420	440	850	900
1500	160	150	320	300	700	625
2000	100	75	200	150	500	340
2500	65	40	130	80	300	200
3000	40	20	90	40	200	110
3500	25	12	60	25	140	60
4000	15	7	40	15	100	40
4500	–	–	25	8	70	25

□e□ ar□

In general a monorail system is fixed with the brackets to a steelwork consisting of IPE-girders.
While calculating the steelwork, it is very important to respect an f max according to the application:
f max < 1/400 for monorails in single straight tracks
f max < 1/500 for monorails in the stock areas of the circuit

Please contact our engineering department for applications with heavy impact loads, or in the case of F or Q > 1000 kg (/m).

The standard track bends in a monorail system are supplied with a radius from 310 mm up to 1200 mm.
On request the track bends can be manufactured with an other radius.
The standard track bends are provided at both ends with a straight piece of track in order to ensure a perfect joining to the following straight track.
We have various vertical bends available in our program as well.

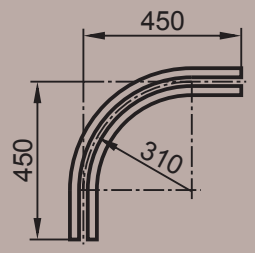

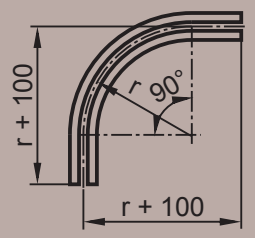

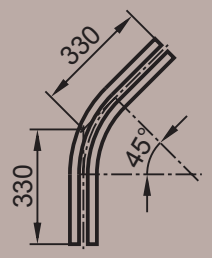

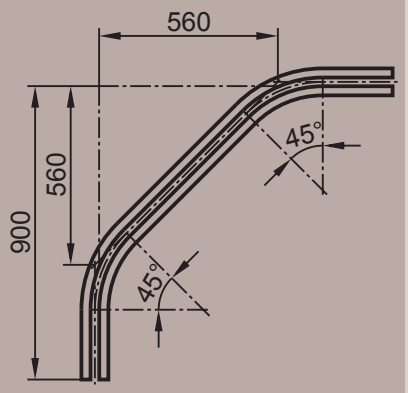

Angle	Radius in mm	Series □□□□□□□	Series □□□□□□□	Series □□□□□□□	Series □□□□□□□
90°	310	230.010	240.010	250.010	260.010
90°	400	230.020	240.020	250.020	260.020
	500	230.030	240.030	250.030	260.030
	600	230.040	240.040	250.040	260.040
	700	230.050	240.050	250.050	260.050
	800	230.060	240.060	250.060	260.060
	900	230.070	240.070	250.070	260.070
	1000	230.080	240.080	250.080	260.080
	1200	230.090	240.090	250.090	260.090
45°	310	230.110	240.110	250.110	260.110
90° lengthened	310	230.150.903.1	240.150.903.1	250.150.903.1	260.150.903.1

□eneral

The track bends with a radius up to and including 600 mm are provided with a vertical and drilled suspension plate. The track curves with a radius larger than 600 mm are fastened with clamps and standard brackets to an I-girder of the support steelwork.

□□□□en□ion □iece □□□e □

The suspension piece type A is welded to the support steelwork and is applicable for track curves with a radius up to and including 600 mm.

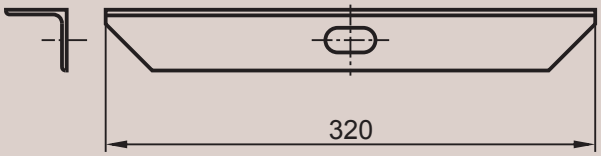

R	Reference
310	250.010.7
400/500/600	250.030.7

□□□□en□ion □iece □□□e □

The suspension piece type B is clamped to support steelwork executed in IPE-girder 120 up to and including IPE 270 and is applicable for track curves with a radius up to and including 600 mm.

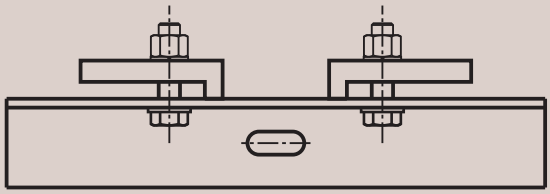

R	Reference
310	250.010.7
500	250.030.7
600	250.040.7

□□□□ddition

The lengthened track curves 90° are fastened to an I-girder of the steelwork with 2 pairs of standard clamps.

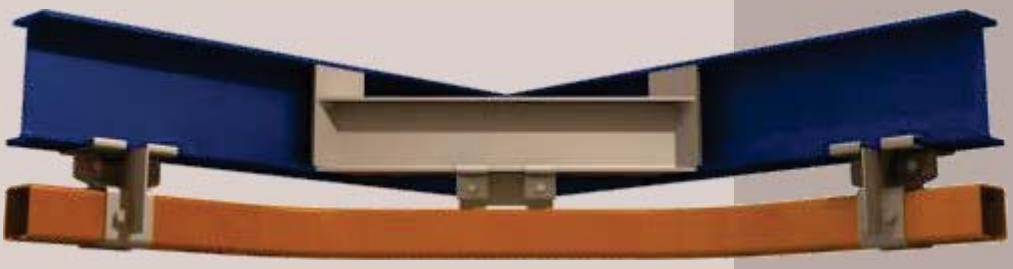

All switches are fitted with movable, load bearing tongues.
The switch mechanism is mechanical and is operated by a chain. For the standard mechanism the pull chain is located at 500 mm from the monorail. On request a lengthened mechanism can be supplied so that the pull chain is suspended further from the track.

E□ec□tion □o□t□e □□I□□EC□NIE□ □witc□e□
The switches are schematically indicated in top view. For the standard execution of the 2 way switches the pull chain for the operation of the switch mechanism is suspended to sidewards the straight track. On request the pull chain can be suspended sidewards to the track curve.
Code:...../002
(except for Y-switches)

□e□ ar□
The track switches also can be fitted out with a pneumatic or electrical switching device for farther information please talk to our application engineering department

□c□e□ atic □iew

□□□ □IE□

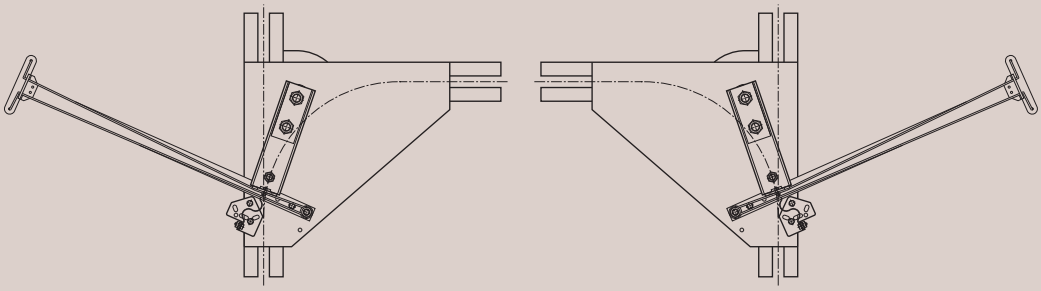

switch right switch left

□□□□□□ □□IE□

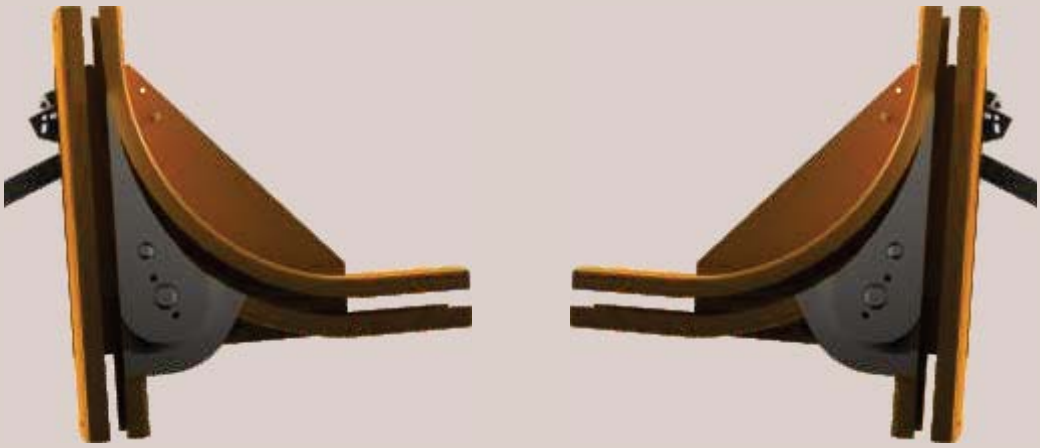

switch right switch left

□□□ a□ □witc□e□

□□° □witc□

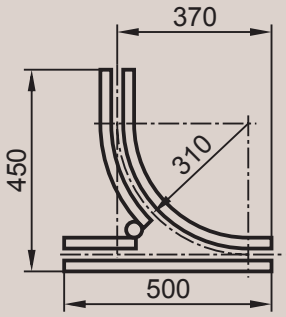

right	left
230.511	230.521
240.511	240.521
250.511	250.521
260.511	260.521

□□° □witc□

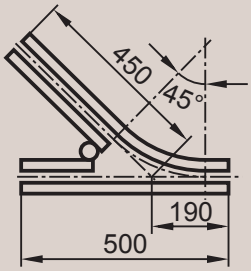

right	left
230.531	230.541
240.531	240.541
250.531	250.541
260.531	260.541

□□° □witc□

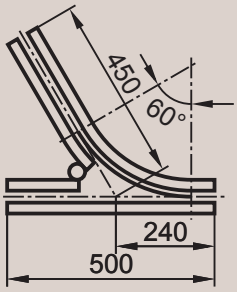

right	left
230.551	230.561
240.551	240.561
250.551	250.561
260.551	260.561

□□ecial □witc□ wit□ an□ c□r□e angle

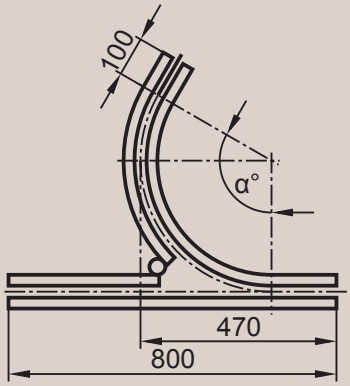

right	left
230.511/xxx99	230.521/xxx99
240.511/xxx99	240.521/xxx99
250.511/xxx99	250.521/xxx99
260.511/xxx99	260.521/xxx99

xxx = α°

□rac□ □witc□e□

□witc□ wit□ lengt□ened c□r□e

right	left
230.571	230.581
240.571	240.581
250.571	250.581
260.571	260.581

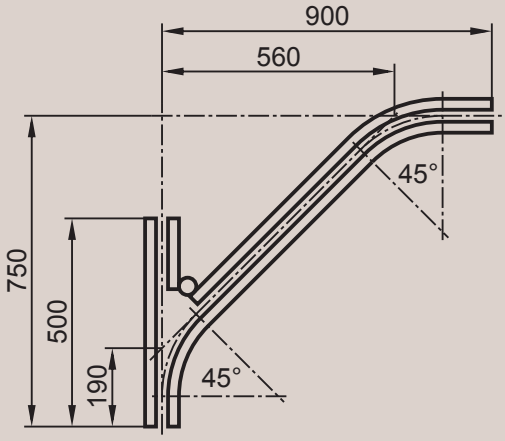

□□□witc□□□ □ □□°

pull chain right	pull chain left
230.621/002	230.621/001
240.621/002	240.621/001
250.621/002	250.621/001
260.621/002	260.621/001

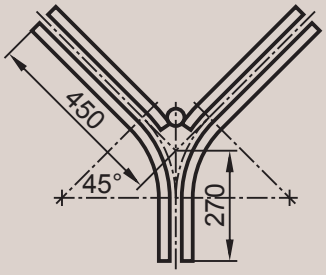

□□□witc□□□ □ □□°

pull chain right	pull chain left
230.611/002	230.611/001
240.611/002	240.611/001
250.611/002	250.611/001
260.611/002	260.611/001

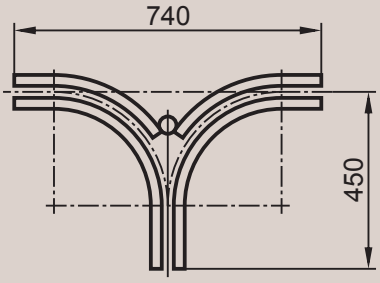

lengt□ened □□□witc□□□ □ □□°

pull chain right	pull chain left
230.591/002	230.591/001
240.591/002	240.591/001
250.591/002	250.591/001
260.591/002	260.591/001

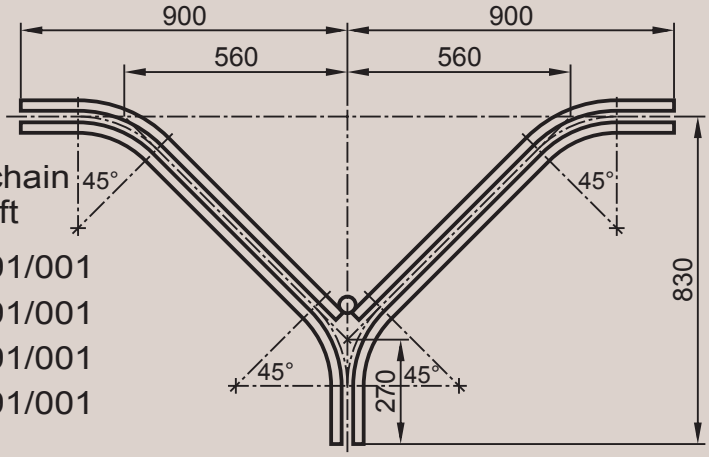

□□□ a□ □witc□e□

□wa□ □witc□ □ □ □□°

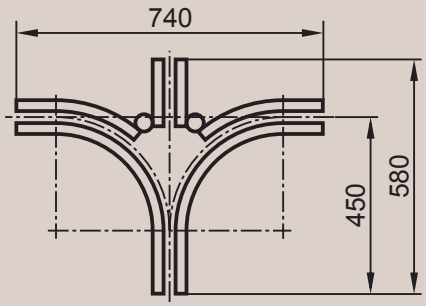

230.671
240.671
250.671
260.671

□wa□ □witc□ □ □ □□°

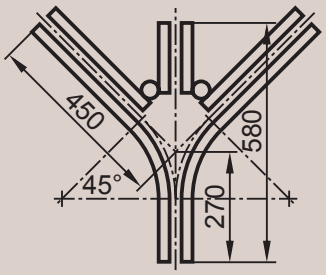

230.681
240.681
250.681
260.681

lengt□ened □wa□ □witc□ □ □ □□°

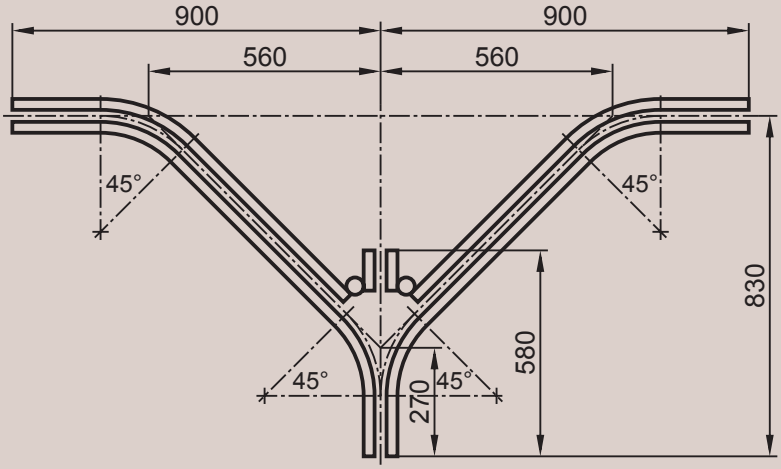

230.791
240.791
250.791
260.791

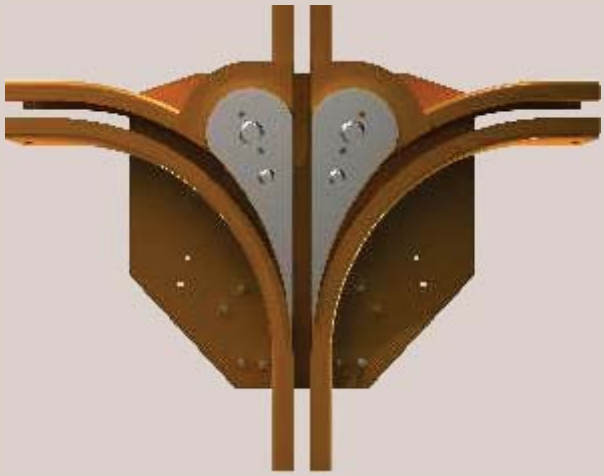

Co□ □o□ed □□□witc□e□

Co□ □o□ed □□□witc□e□ □□tandard e□ec□tion□

pull chain “Y” right	pull chain “Y” left
230.691/002	230.691/002
240.691/002	240.691/002
250.691/002	250.691/002
260.691/002	260.691/002

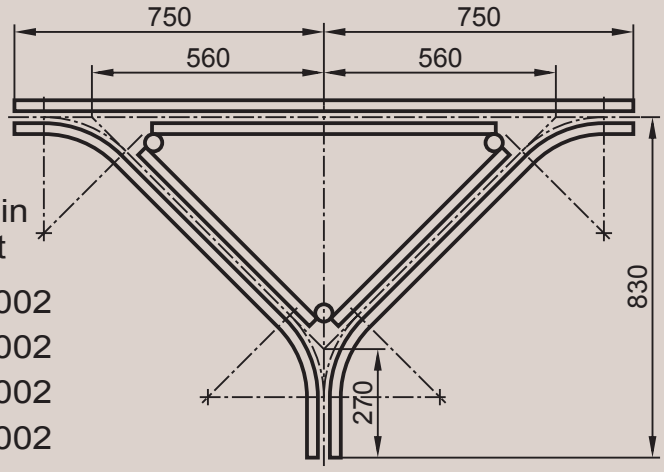

Co□ □o□ed □□□witc□e□ □□□ortened e□ec□tion□

pull chain “Y” right	pull chain “Y” left
230.781/002	230.781/002
240.781/002	240.781/002
250.781/002	250.781/002
260.781/002	260.781/002

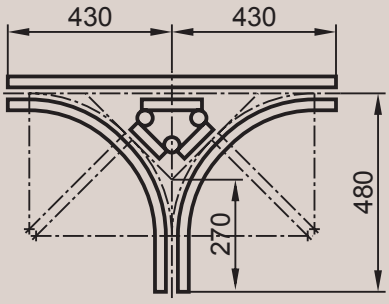

□ne□□ aticall□ □ □erated □witc□e□

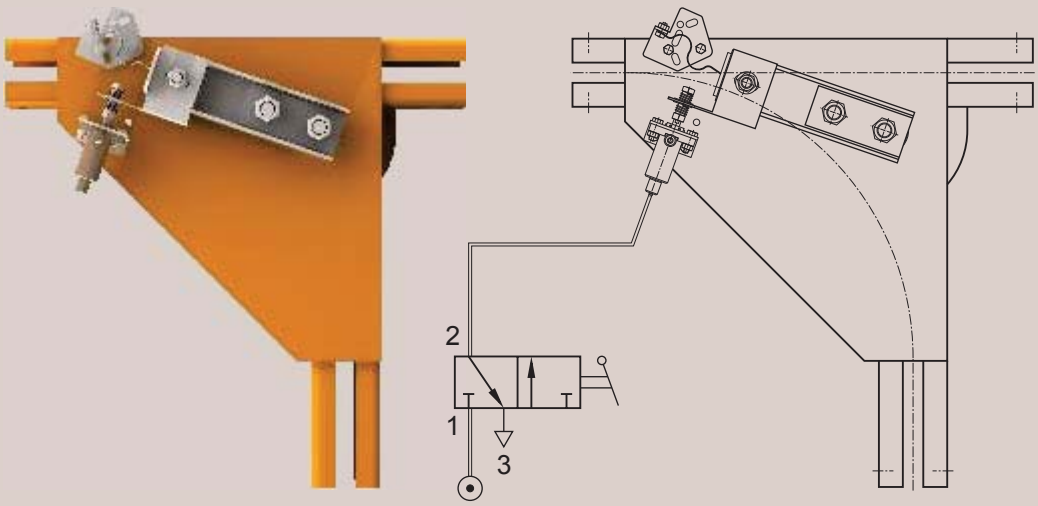

□□ecial □witc□ □ □eration□

The pull mechanism of these 2 way switches is replaced by a specially adapted mechanism.
As the trolley itself operates the switch, this kind of switches does not need the operator intervention.

□witc□ wit□o□t o□eration

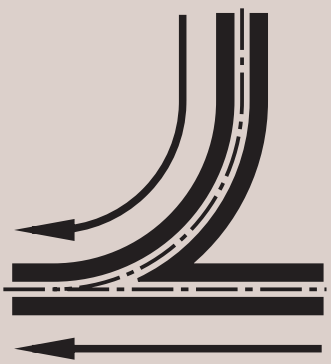

Is used when the load is always transfered in the direction of the indicated arrows (see figure)
Codification ...003
E.g. 250.520/003

□□ring o□erated □witc□

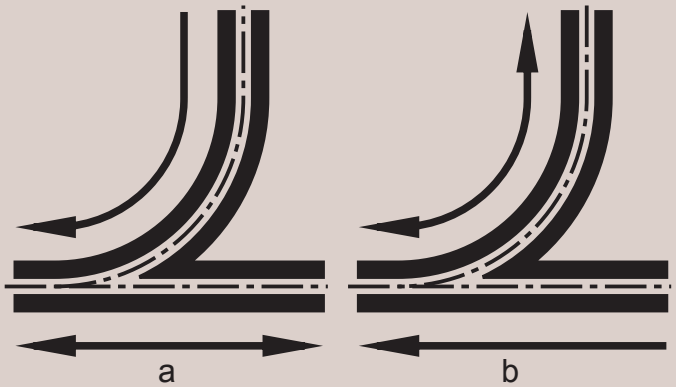

The load carrying direction tongue of this two way switch is held in a predetermined position by a spring mechanism. The spring mechanism is easy to reverse which makes it possible to choose between the running a or b (see figure)
Code .../007 Ex. 250.520/007

□witc□
Co□ □ination□

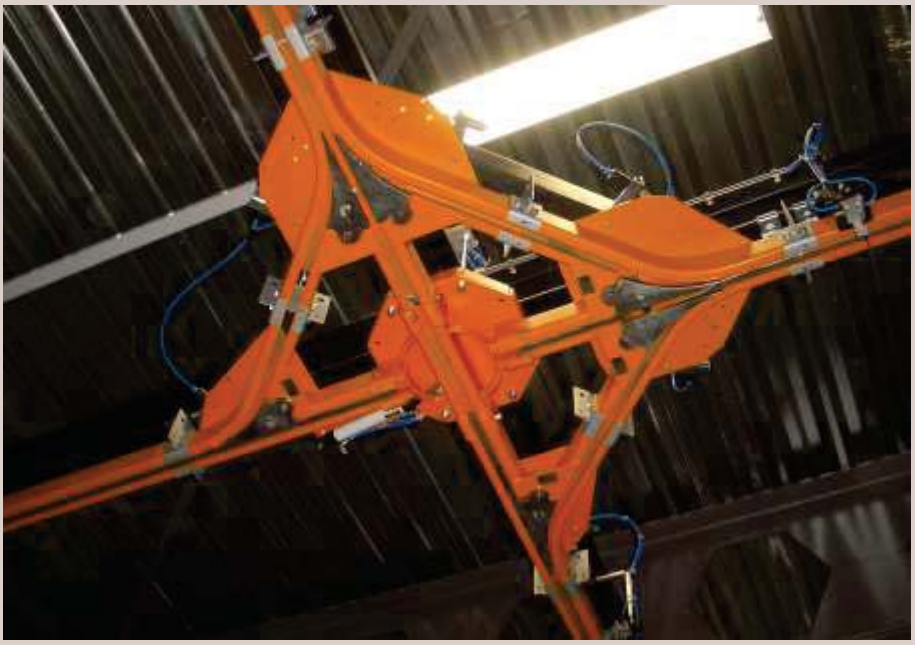

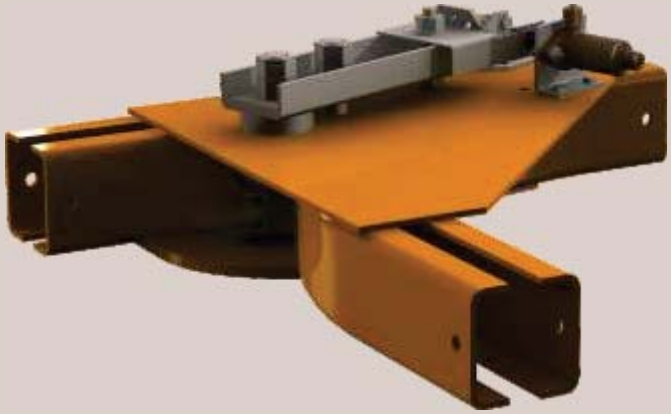

□□rnta□le

The operation of a turntable can be either pneumatic or electric
(Please contact our engineering department for the latter case).

The turntable can only be operated without a trolley in the turntable.

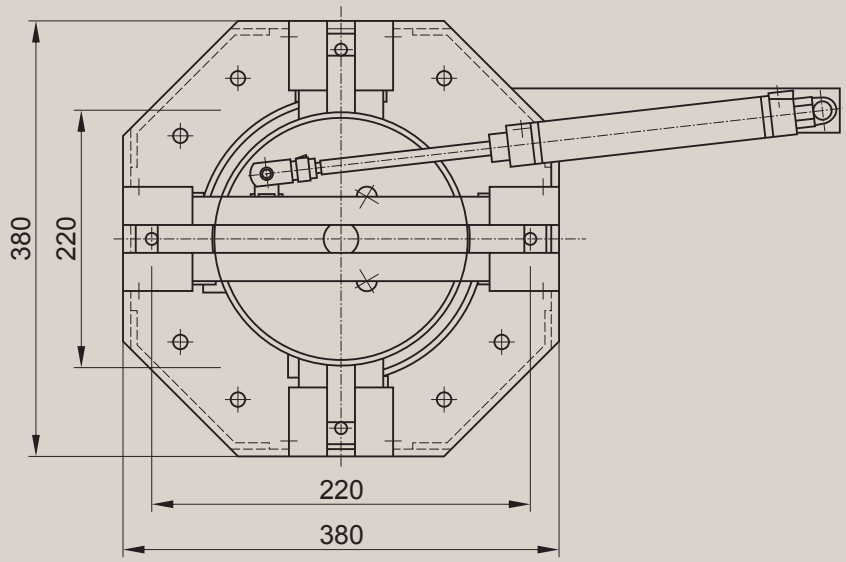

230.730
240.730
250.730

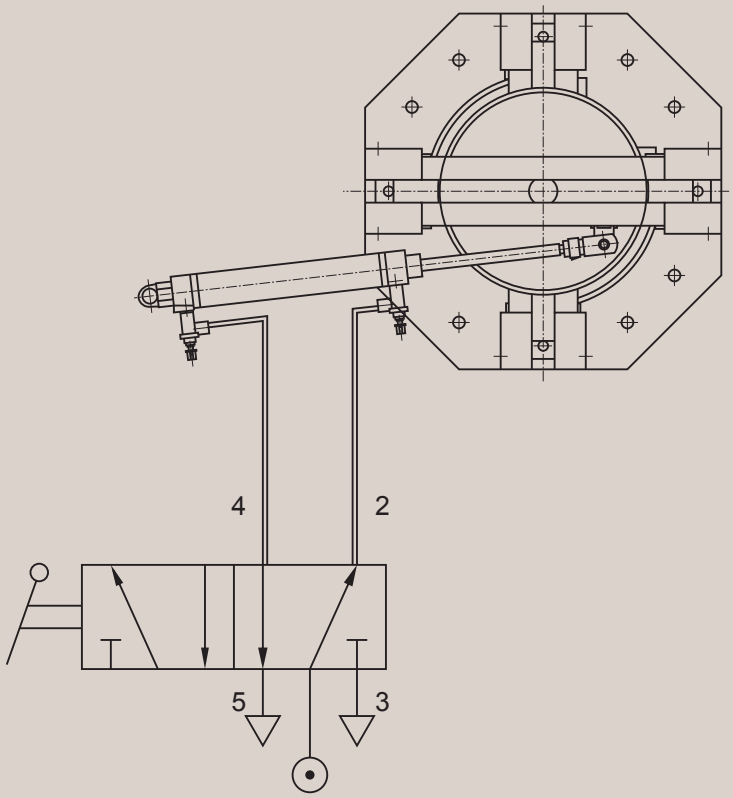

□witc□□□□rnta□le Co□ □ination

A turntable is commonly used in combination with switches.
In order to ease the mounting of these combinations, the use of the switches as follows on is strongly recommended,
because of their specially adapted overall dimensions.

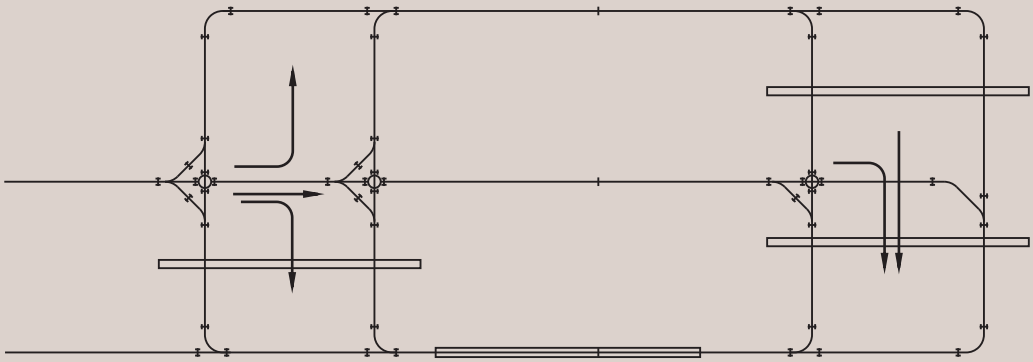

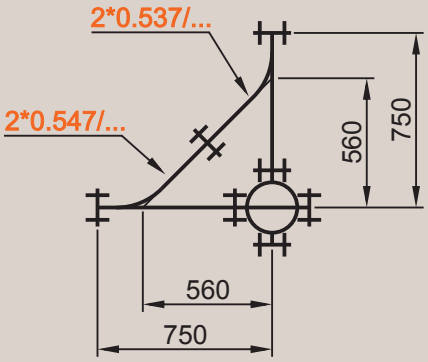

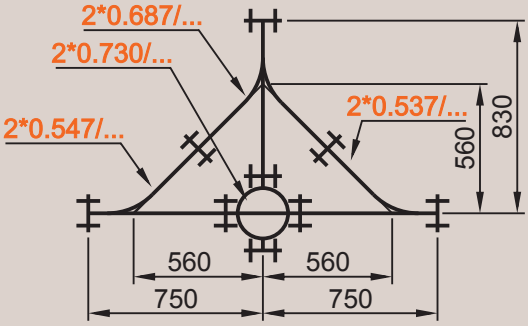

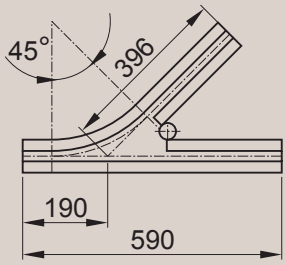

2*0.537 right
2*0.547 left

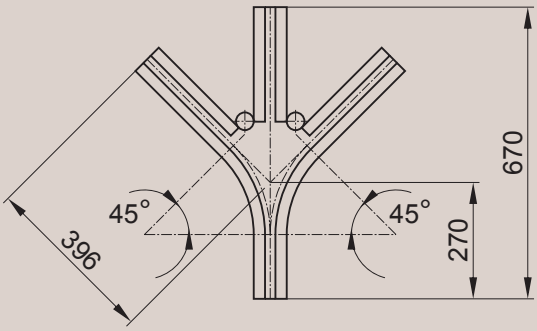

2*0.687

□rac□ □witc□ o□erating de□ice□

De□cri□tion o□t□e □witc□e□wit□ □tandard o□erall di□en□ion□	code
- Y-switch - pull chain at the left	... .../001
- Switch with pull chain sidewards to the track curve	... .../002
- Y-switch with pull chain at the right	... .../002
- Switch without operation	... .../003
- Automatic switch for 2-wheeled trolley	... .../004
- Switch with lengthened pull chain	... .../005
- Y-switch with lengthened pull chain at the left	... .../005
- Switch with lengthened pull chain sidewards to the track curve	... .../006
- Y-switch with lengthened pull chain at the right	... .../006
- Spring operated switch	... .../007
- Pneumatically operated switch	... .../009
- Automatic switch for 4-wheeled trolley	... .../024
- Automatic pneumatically operated switch	... .../094

De□cri□tion o□t□e □witc□e□wit□ ada□ted o□erall di□en□ion□	code
- 2 way switch 45° right	2*0 733
- 2 way switch 45° left	2*0 734
- 3 way switch	2*0 738

□ □a□ □witc□ □it□ □□ecial □witc□ □□erating De□ice

This 3 way switch is composed of a combination of switches with different functions.
e.g. A 3 way switch may be composed of a switch without operation and of a second one spring operated.
As this 3 way switch is composed of two separate working switches the function is indicated with a identification number of 5 figures which follows the order number of the switch.
The first three figures of the codification refer to the mechanism of the right switch and the last two figures of the identification number refer to the mechanism of the left switch.
The reference is for instance : 250.607/00307
This is a 3 way switch 2 x 90° of which the switch without operation is the right one and the

□witc□e□ □it□ □engt□ened □□ll C□ain

The switches are fitted out with a lengthened pull chain in case of transport of large loads.
In this execution the pull chain is suspended at 1 m from the monorail.
Identification number:

e.g.:	- Standard switch - with lengthened pull chain:	240.510.005
	- Y-switch - with lengthened pull chain left:	240.620.005
	- Y-switch - with lengthened pull chain right:	240.620.006

The use of loadbars allows the transport of several products together. A loadbar consists of a flightbar with a buffer on both sides. The single or double trolleys are mounted on fixings that are welded on the crossbar at a distance equal to the parallel track width in the monorail circuit. These fixings ensure that □endant connections between the trolleys and the loadbar are kept constant, in order to avoid excessive wearing of the curves and the track switches.

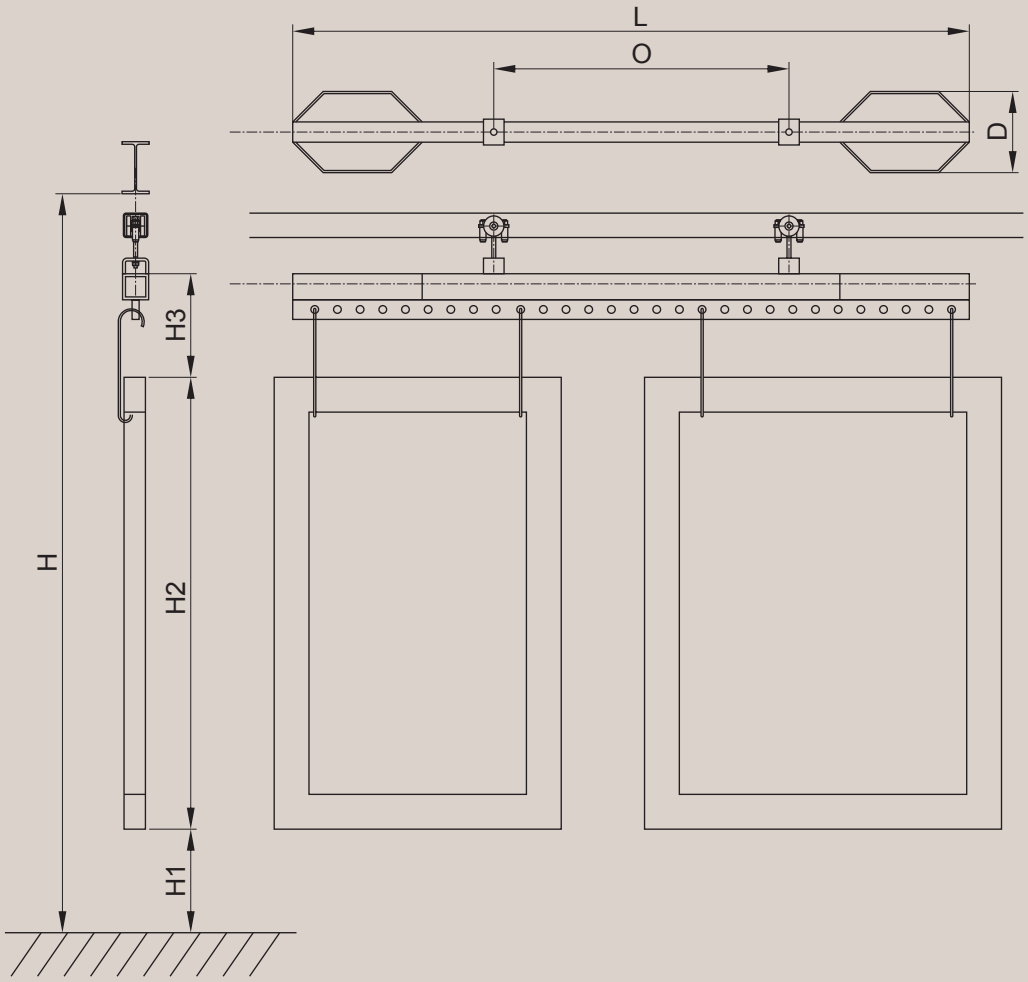

□rolle□

□ingle □rolle□

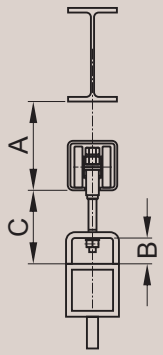

2.4.010.001

Do□□le □rolle□

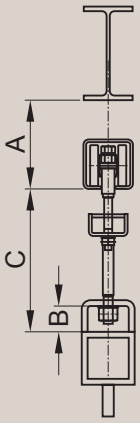

2.4.040.001

	trolley	A	B	C
230.000	234.010.001	126	50	113
	234.040.001			213
240.000	244.010.001	134	50	114.5
	244.040.001			213
250.000	254.010.001	160	50	143
	254.040.001			215

Ceiling Mo□nted Brac□et

In□tr□ction□ □or □□e

The brackets are subdivided in to standard and joining brackets.
A standard bracket is used as suspension point for the track.
A joining bracket is used as suspension point where two tracks are joined.

A monorail installation can be mounted directly to a ceiling (subject to the ceiling strong enough) or to a horizontal mounting face.
If switches are applied in an overhead runway a headroom of 60 mm should be provided.

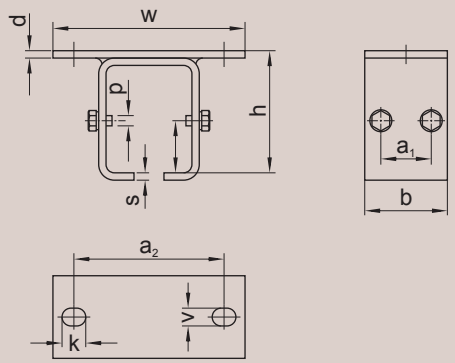

2*1.230

standard bracket	jointing bracket	w	h	a_1	a_2	b	s	t	v	k	p	d
231.230	231.240	142	82	35	108	60	6	33	Ø13	-	M8	6
241.230	241.240	160	94	35	124	60	8	37	Ø14	-	M10	8
251.230	251.240	185	119	50	145	80	8	50	17	22	M10	8

Finish: painted

Brac□et□on □□readed □od

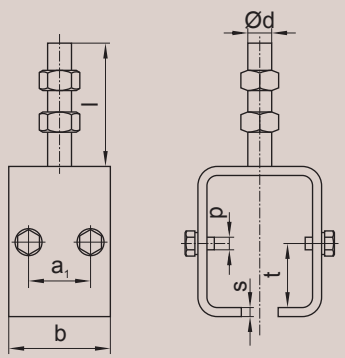

2*1.340

standard bracket	jointing bracket	Ød	l	b	s	a_1	t	p
231.310	231.340	M12	72	60	6	35	33	M8
241.310	241.340	M16	75	60	8	34	37	M10
251.310	251.340	M20	95	80	8	50	50	M10

Finish: electro galvanized

□all Fi□ing Brac□et

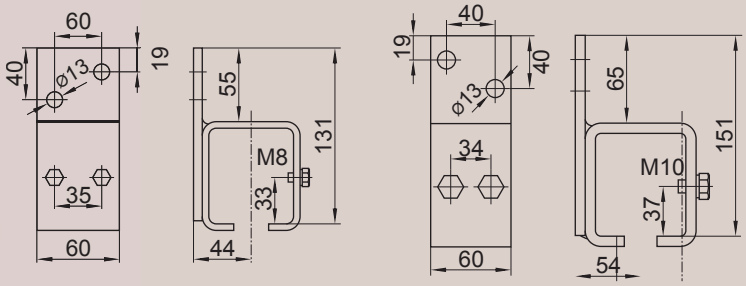

* standard bracket: 231.130 * 241.130
** jointing bracket: 231.140 ** 241.140

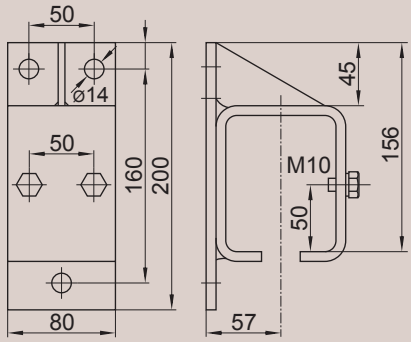

2*1.130
Finishing: painted

* 251.130
** 251.140

□ointing □iece

A jointing piece is used if there is no suspension point and if two track ends are to be linked.
The jointing piece should be placed as close as possible to a bracket.

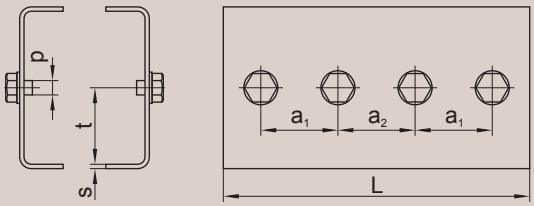

standard execution	execution for switch	L	a_1	a_2	t	s	P
231.910	231.990	160	35	35	33	3	M8
241.910	241.990	160	35	35	37	3	M10
251.910	251.990	200	50	50	50	4	M10

Finishing: electro galvanised

□ni□er□al Mo□nted Brac□et

A monorail installation can be mounted directly to a ceiling (subject to the ceiling strong enough) or to a horizontal mounting face.
If switches are applied in an overhead runway a headroom of 60 mm should be provided.

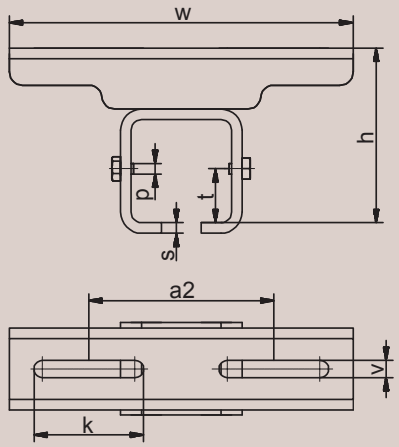

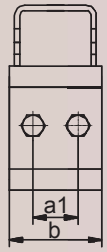

standard bracket	jointing bracket	w	h	a_1	a_2	b	s	t	v	k	p
RT-36053	RT-36054	142	82	35	108	60	6	33	13	- -	M10
RT-32678	RT-32675	260	134	35	140	70	8	37	13	84	M10
RT-36685	RT-36682	260	160	50	145	100	8	50	17	91	M10

Finishing: painted

Brac□et □or □arallel □i□ing

A monorail can be mounted under an I-girder in a longitudinal direction.
On request heightened brackets can be supplied.
In this case the measure “h” should be mentioned.

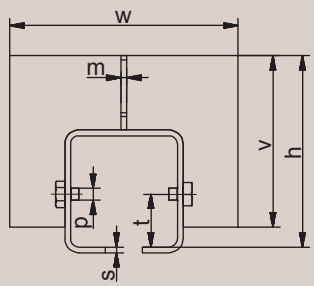

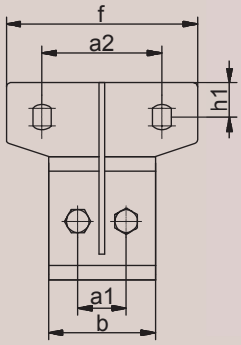

standard bracket	jointing bracket	w	h	m	v	f	t	s	a_1	a_2	b	p	h_1
231.750	231.760	150	126	4	120	134	33	4	35	84	65	M8	24
241.750	241.760	160	134	4	120	134	37	4	34	84	75	M10	24
251.750	251.760	180	160	5	140	185	50	5	50	124	100	M10	26

Finishing: painted

Brac□et □or cro□□ □i□ing

This bracket enables a mounting of the monorail under an I-girder in a diagonal direction. On request heightened brackets can be supplied. In this case the measure “h” should be mentioned.

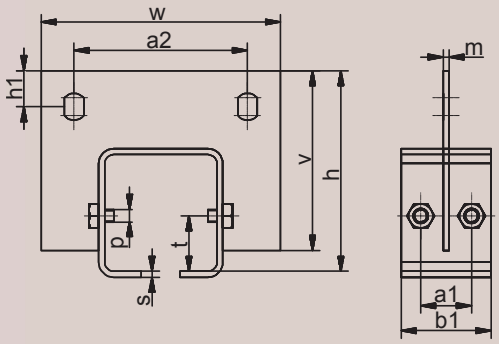

standard bracket	jointing bracket	w	h	m	v	a_1	a_2	b	t	s	p	h_1
231.710	231.720	150	126	4	120	35	106	65	33	4	M8	24
241.710	241.720	160	134	4	120	34	116	75	37	4	M10	24
251.710	251.720	180	160	5	140	50	135	100	50	5	M10	26

Finishing: painted

Cli□□ □or I□□irder □□□□□□□□

Clips for parallel or cross fixing are used to mount a monorail directly under an I-girder.
Two clips, fitted to the lowest width of the flange, have to be provided for each bracket.

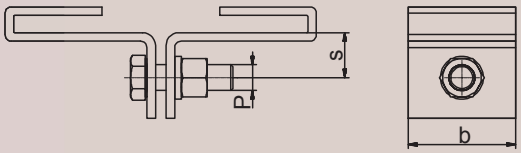

Track	s	b	P
230.000	21	40	M12
240.000	21	50	M12
250.000	21	60	M14

Clip for IPE-girder			
IPE 100	231.850/10	241.850/10	251.850/10
120	231.850/12	241.850/12	251.850/12
140	231.850/14	241.850/14	251.850/14
160	231.850/16	241.850/16	251.850/16
180	241.850/18	241.850/18	251.850/18
200	241.850/20	241.850/20	251.850/20
220	241.850/22	241.850/22	251.850/22
240	241.850/24	241.850/24	251.850/24
270	241.850/27	241.850/27	251.850/27

Finishing: electro galvanised

The interruption of a monorail is often necessary in the case of fire proof doors, sliding doors for ovens, locking devices for unloading areas, roller shutters, guillotine doors, etc.
The built-in security guarantees that the monorail interrupter cannot open in the instance where a trolley is inside the unit.

A left or a right turning operation is available.

Execution
Mechanical or pneumatic operation is available.

Mechanical Operation

In case of mechanical operation the sliding door opens the interrupter.
The closing of the interrupter is by a spring mechanism.
The track length "L" is determined as a function of the door thickness "D"

A specific door thickness corresponds with a 4 digit code, which follows the order reference.

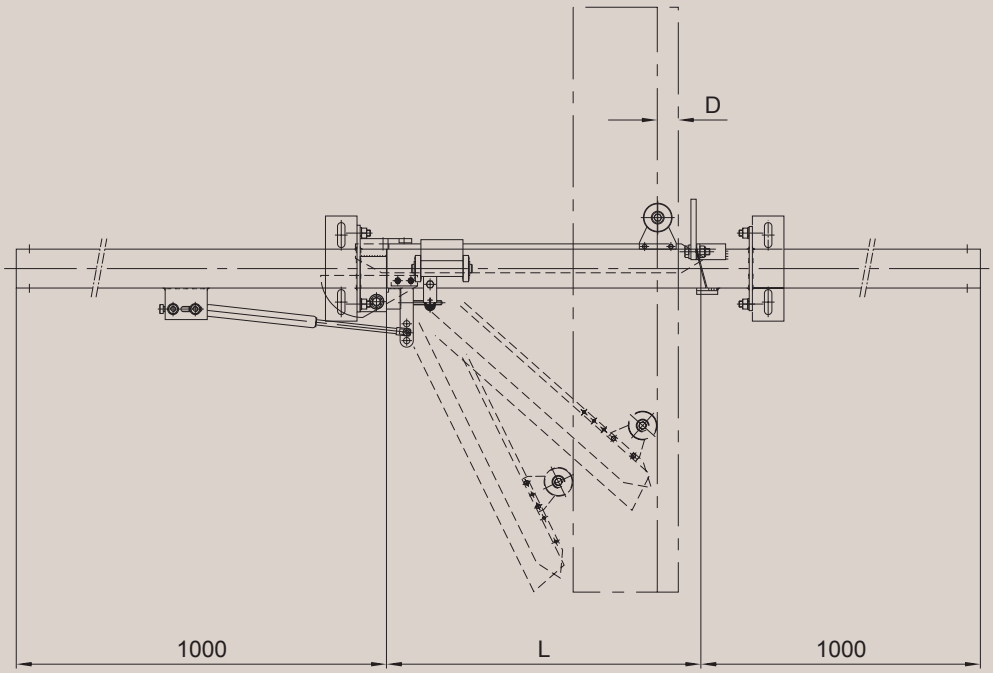

Door thickness	Code
0 to 50	0050
50 to 80	0080
80 to 125	0125
125 to170	0170
170 to 200	0200

Pneumatic Operation

In this case the interrupter is opened by a pneumatic cylinder.
The track length is standard executed with L= 550 mm. In open position the free passage is 320 mm

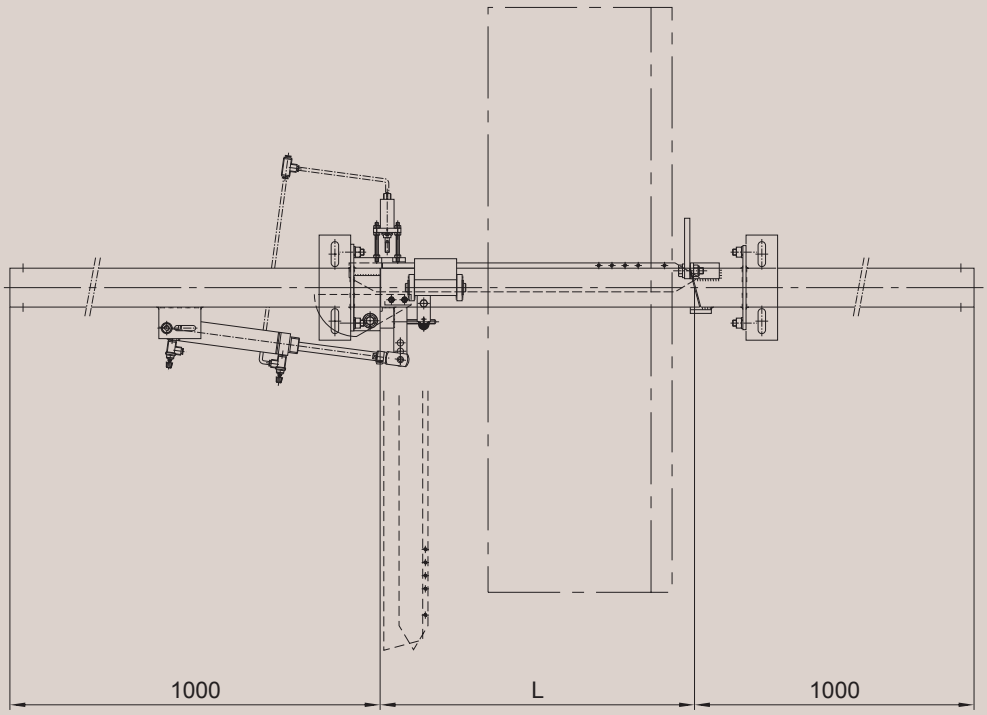

Monorail interr□□ter			
Mechanical		Pneumatic	
rotation		rotation	
Right	Left	Right	Left
232.110 code	232.120 code	232.110.009	232.120.009
242.110 code	242.120 code	242.110.009	242.120.009
252.110 code	252.120 code	252.110.009	252.120.009

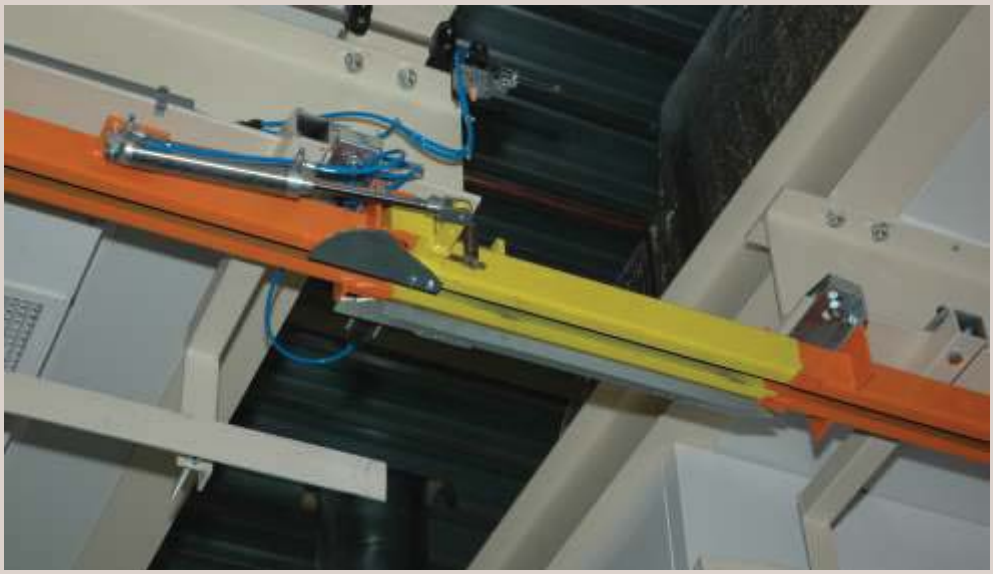

□eneral

This device is used for applications where the track can expand e.g. safety tracks or ovens. The expansion device is composed of a special bracket with tracks finished at one side as indicated by the drawing.

According to the fastening possibilities the following options are available.

To calculate the number of expansion devices one should take into account that for each expansion device the maximum expansion is 20 mm. The expansion devices are mounted with the maximum opening so that the tracks can expand in case of temperature increase.

	P	S	a
230.000	M8	18.5	40
240.000	M10	20	40
250.000	M10	25	50

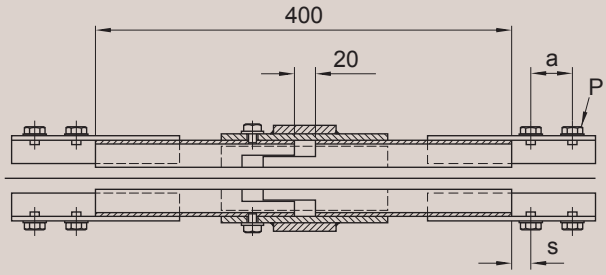

E□□an□ion Brac□et □or l□□rider

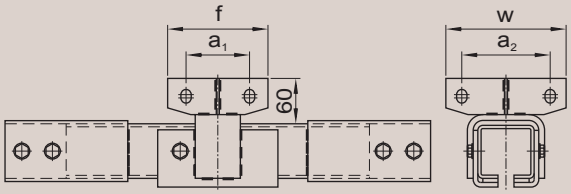

Reference	w	a_1	a_2	f
231.970.400	150	84	84	134
241.970.400	160	84	84	134
251.970.400	180	124	124	185

E□□an□ion Brac□et on □□readed □od

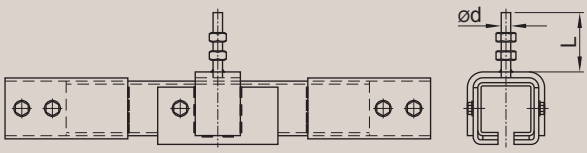

Reference	L	ød
231.950.400	72	M12
241.950.400	74	M16
251.950.400	95	M20

E□□an□ion Ceiling Mo□nted Brac□et

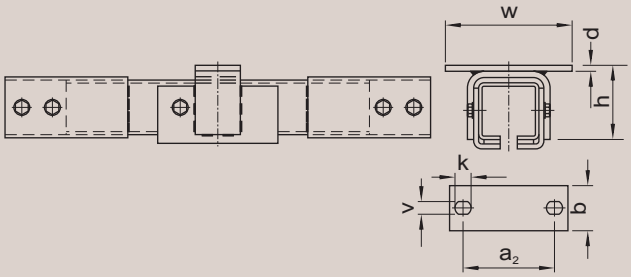

Reference	w	a_2	v	k	d	b	h
231.980.400	142	108	ø13	-	6	60	82
241.980.400	160	124	ø14	-	8	60	94
251.980.400	145	145	17	22	8	80	119

End Ca□ □ it□ B□□er

The end cap with buffer is used in combination with a trolley of a hoist or when the trolley should run to the end of the monorail. The rubber buffer can be adjusted according to the type of trolley running in the monorail.

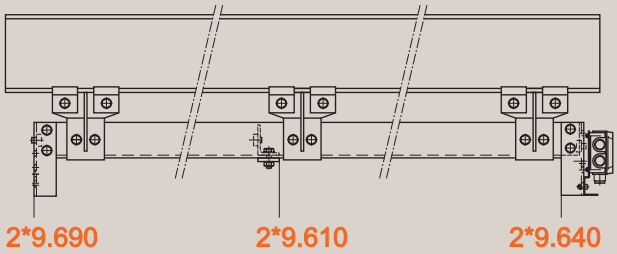

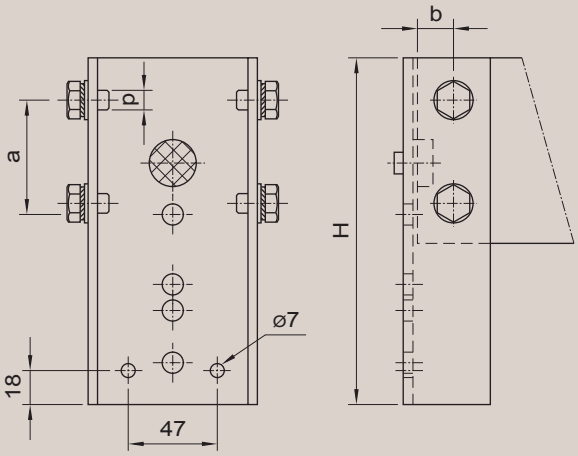

Reference	a	b	p	H
239.690	35	15	M8	134
249.690	40	20	M10	134
259.690	55	20	M10	185

End Ca□ □ it□

□□□□□□□□□□□□□□

This end cap is provided with a connecting box for flat and flexible electric cables and with fixing holes for the fastening of a cable clamp.

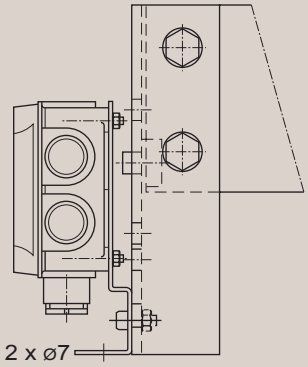

Track	End cap
239.640	134
249.640	134
259.640	185

□ail □to□

The rail stop is used to limit the runway in a monorail.
It is advisable to mount the stop before a bracket.

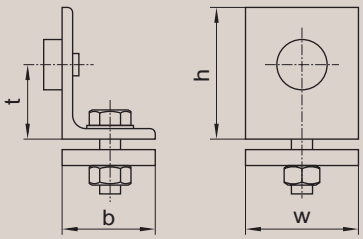

Reference	t	b	h	W
239.610	28	50	50	45
249.610	30	40	60	56
259.610	40	50	70	60

□eneral

Railtechniek developed a complete range of standard wheelsets to which a specific item such as a bolt, a hook etc... fits according the application. All wheelsets are mounted on ball-bearings. The wheels are working independently and are mounted two by two (bogie arrangement). Depending on the application there is the choice between 2-wheeled, 4-wheeled or 8-wheeled trolleys. All trolleys can rotate on their vertical axis (except series ... .550). The trolleys are also provided with vertical guides in order to avoid the overturning and to assure a perfect guidance during the translation. The standard trolleys are fitted for temperatures of maximum 100 °C. In case of working conditions up to 150 °C or up to 300 °C, the trolleys are mounted on special high temperature ball bearings.

The code of the trolleys changes according to the working conditions : e.g. :

	Up to 100 °C	Up to 150 °C	Up to 300 °C
Ref.	244 010/1	243 510/1	243 010/1

Carr□ing ca□acit□o□t□e trolle□□
In the tables the maximum carrying capacity 'F' is indicated.
In order to calculate the carrying capacity F, the real net load has to be increased with the operating coefficient and the
temperature coefficient 'y'.

F = Fn x Ψ x y

□e□ ar□□
The maximum admissible carrying capacity "F" of the trolleys is indicated in the tables with operating coefficient Ψ =1 and temperature coefficient y =1.

Note□
The maximum temperature for trolleys with nylon wheels is 80 °C.
Finishing: electro galvanized

□a□le□□

□□E□□□IN□ C□EFFICIEN□ Ψ

Kind of operating	Coefficient Ψ
I. Very moderate use, no shock or impact load (e.g. the daily transfer of a load along some meters)	1
II. Normal use, very light shock or impact load (e.g. automatic equal motion with a speed of max. 10 m/min., motion time of the trolleys up to 20 % max.)	1.21
III. Frequent use, light shock or impact load (e.g. manual motion with unequal speed, motion time of the hangers 20 to 50 %).	1.33
IV. Very frequent use, shock or impact load (e.g. continuous working automatic installations, motion time of the hangers 50 to 100 %	2

□a□le□□

□EM□E□□□□□E C□EFFICIEN□ □

Temperature	Temperature coefficient y
15 à 100 °C	= 1
à 150 °C	= 1.05
à 200 °C	= 1.15
à 225 °C	= 1.25
à 250 °C	= 1.35
à 275 °C	= 1.50
à 300 °C	= 1.70

□ □eel □et □□□□C

These wheelsets are mounted on sealed ball bearings and are greased for life.

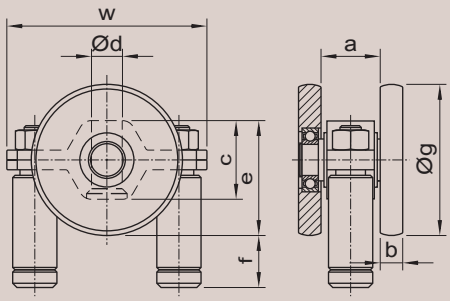

	F*(kg)	a	b	c	Ød	e	f	Øg	w
Steel wheels									
234.010/1	125	25	9.5	27.5	12.2	41	19	54.5	90
244.010/1	250	30	12	32	12.2	48	20.5	61.5	91.5
254.010/1	500	31	12	39	16.2	59	27.5	79.2	105
Nylon wheels									
234.015/1	125	24	10	27.5	12.2	41	18.5	54.6	90
244.015/1	200	30	12	32	12.2	49	19.5	63.5	91.5
254.015/1	300	31	12	39	16.2	56	31	72.5	105

□ □eel □et □□□□C

These wheelsets are mounted on open ball bearings which are greased with special grease fitted for high temperature. Nothing but oil or grease specially adapted for high temperature, may be used for further lubricating.

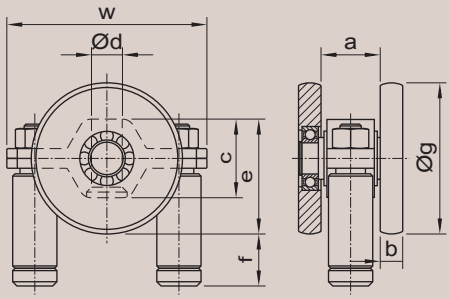

	F*(kg)	a	b	c	Ød	e	f	Øg	w
233.510/1	125	25	9.5	27.5	12.2	41	19	54.5	90
243.510/1	250	30	12	32	12.2	48	20.5	61.5	91.5
253.510/1	500	31	12	39	16.2	59	27.5	79.2	105

□ □eel □et □□□□C

These wheelsets are mounted on open ball bearings which are greased with special grease fitted for high temperature. Further lubricating can be done manually or automatically. Nothing but oil or grease specially adapted for high temperature, may be used for further lubricating.

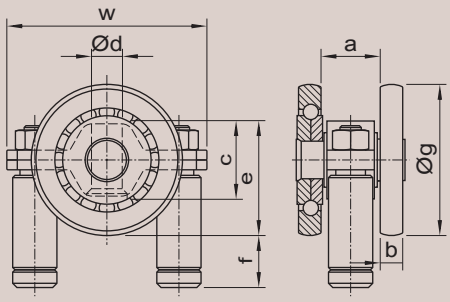

	F*(kg)	a	b	c	Ød	e	f	Øg	w
233.010/1	125	24	10	27.5	12.2	42	18	56	90
243.010/1	250	30	12	32	12.2	47	19.5	62	91.5
253.010/1	500	30	12.5	39	16.2	59.5	27	80	105

□□□ □eeled □rolle□ □ it□ Bolt

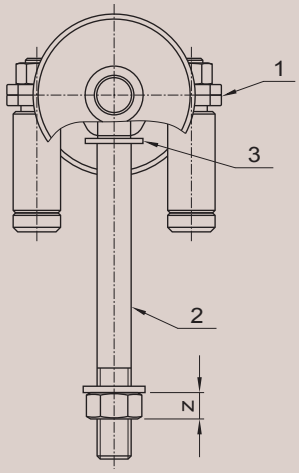

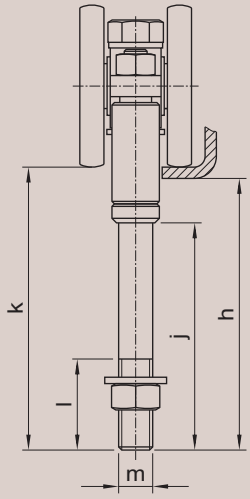

2*4.010

	F*(kg)	h	j	k	l	m	z	1	2	3
Steel wheels								Wheelset	Bolt DIN931	Starlock
234.010	125	94.5	78.5	97.5	36	M12	10	234.010/1	M12 x 140	Ø10
244.010	250	96	79	100	36	M12	10	244.010/1	M12 x 150	Ø12
254.010	500	133	110.5	138	44	M16	13	254.010/1	M16 x 200	Ø16
Nylon wheels										
234.015	125	94.5	78.5	97.5	36	M12	10	234.015/1	M12 x 140	Ø10
244.015	200	95	79	99	36	M12	10	244.015/1	M12 x 150	Ø12
254.015	300	136	110.5	141	44	M16	13	254.015/1	M12 x 200	Ø16

□□□ □eeled □rolle□ □ it□ Bolt □ it□ □onger N□t □nd Cla□ □ing □in

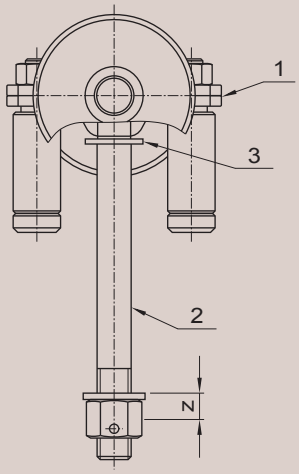

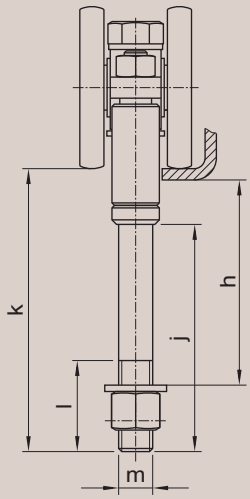

2*4.010/001

	F*(kg)	h	j	k	l	m	z	1	2	3
Steel wheels								Wheelset	Bolt DIN931	Starlock
234.010/001	125	72	78.5	97.5	36	M12	16	234.010/1	M12 x 140	Ø10
244.010/001	250	71.5	79	100	36	M12	16	244.010/1	M12 x 150	Ø12
254.010/001	500	101	110.5	138	44	M16	20	254.010/1	M16 x 200	Ø16

□□□ □eeled □rolle□ □ it□ E□e N□t

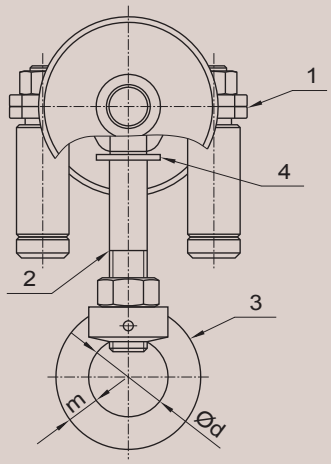

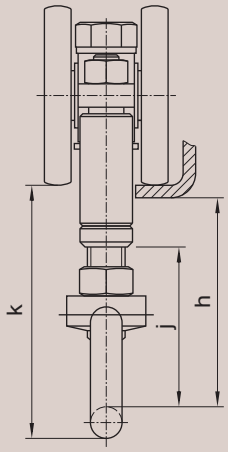

2*4.010/003

	F*(kg)	h	j	k	Ød	m	1	2	3	4
Steel wheels							Wheelset	Bolt DIN931	Eye nut	Starlock
234.010/003	125	71	55	85	30	11	234.010/1	M12 x 90	M12	Ø10
244.010/003	250	62	45.5	77	30	11	244.010/1	M12 x 90	M12	Ø12
254.010/003	500	92	69.5	111	35	14	254.010/1	M16 x 130	M16	Ø16
Nylon wheels										
234.015/003	125	71	55	85	30	11	234.015/1	M12 x 90	M12	Ø10
244.015/003	200	61	45.5	76	30	11	244.015/1	M12 x 90	M12	Ø12
254.015/003	300	95	69.5	114	35	14	254.015/1	M12 x 130	M16	Ø16

□□□ □eeled □rolle□ □ it□ Bolt

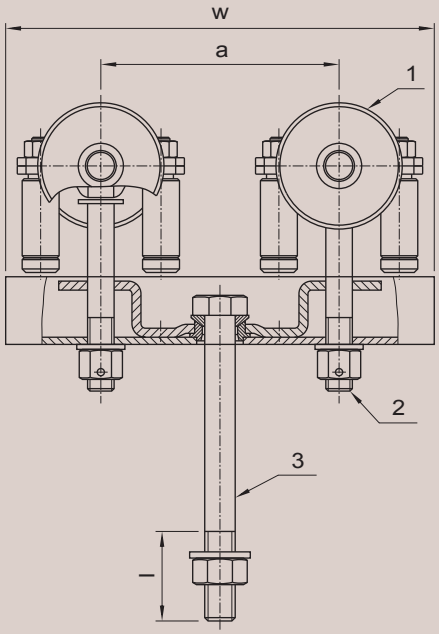

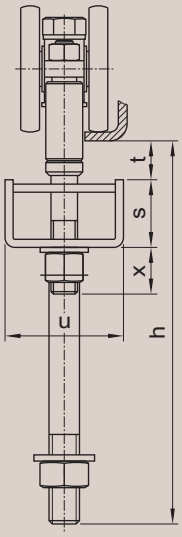

2*4.040

	F*(kg)	w	a	u	t	x	h	l	s	1	2	3
Steel wheels										Wheelset	Bolt DIN931	Bolt DIN931
234.040	250	220	120	58	37	26	206	44	33	234.010/1	M12 x 140	M16 x 150
244.040	500	220	120	58	37	27	206	44	33	244.010/1	M12 x 150	M16 x 150
254.040	1000	250	140	60	43	25	211	52	35	254.010/1	M16 x 170	M20 x 150

□□□ □eeled □rolle□ □ it□ Bolt □ it□ □onger N□t □nd Cla□ □ing □in

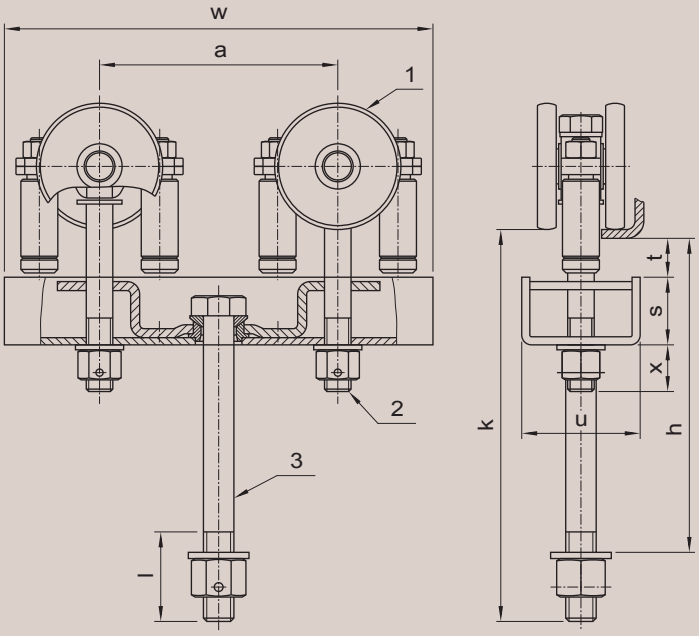

2*4.040/001

	F*(kg)	w	a	u	t	x	h	k	l	s	1	2	3
Steel wheels											Wheelset	Bolt DIN931	Bolt DIN931
234.040/001	250	220	120	58	37	26	171	209	44	33	234.010/1	M12 x 140	M16 x 150
244.040/001	500	220	120	58	37	27	176	210	44	33	244.010/1	M12 x 150	M16 x 150
254.040/001	1000	250	140	60	43	25	173	216	52	35	254.010/1	M16 x 170	M20 x 150

□□□ □eeled □rolle□ □ it□ □□le For □oi□t

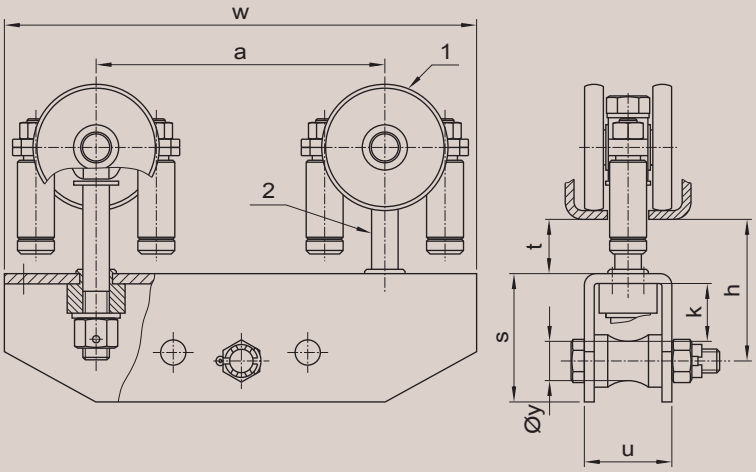

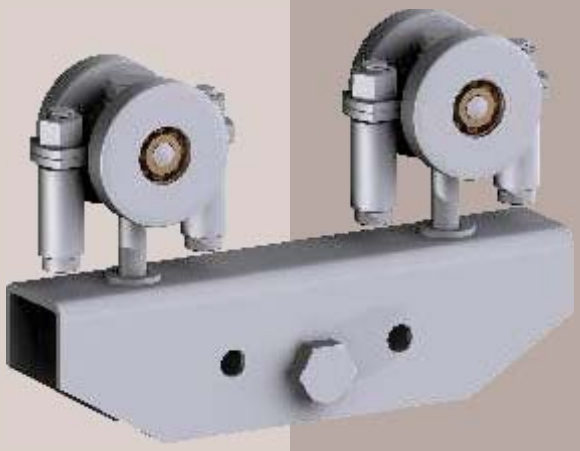

2*4.050

	F*(kg)	w	a	h	k	u	s	t	Ød	1	2
Steel wheels										Wheelset	Bolt DIN931
234.050	250	245	150	66.5	29.5	46	66	22	20	234.010/1	M12 x 110
244.050	500	245	150	75	29.5	46	66	31.5	20	244.010/1	M12 x 130
254.050	1000	280	170	80	32	49	70	32	22	254.010/1	M16 x 150

□□□ □eeled □rolle□ □ it□ □wi□el □oo□ □nd □a□et□ □atc□

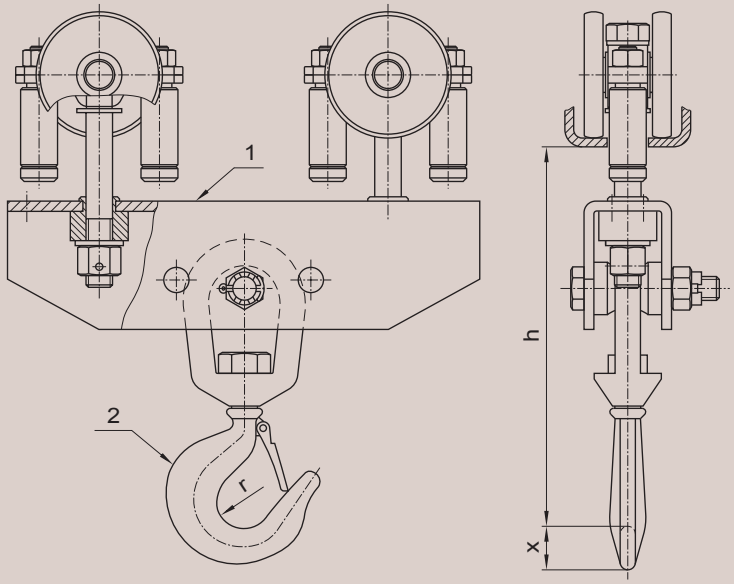

2*4.050/006

	F*(kg)	h	r	x	1	2
Steel wheels					2*4.050	Swivel hook
234.050/006	250	191	14	23	Dimensions see 234.050	254.050.006.000
244.050/006	500	200	14	23	Dimensions see 244.050	254.050.006.000
254.050/006	1000	204	14	23	Dimensions see 254.050	254.050.006.000

□□□ □eeled □rolle□ □ it□ E□e N□t

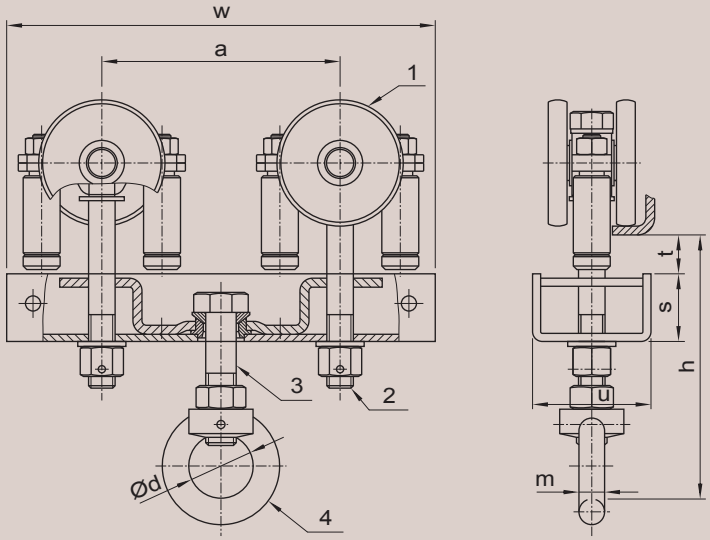

2*4.040/003

	F*(kg)	w	a	u	t	s	h	Ød	m	1	2	3	4
Steel wheels										Wheelset	Bolt DIN931	Bolt DIN931	Eye nut
234.040/003	250	220	120	58	37	33	155	35	Ø14	234.010/1	M12 x 140	M16 x 70	M12
244.040/003	500	220	120	58	37	33	155	35	Ø14	244.010/1	M12 x 150	M16 x 70	M12
254.040/003	1000	250	140	60	43	35	174	40	Ø16	254.010/1	M16 x 170	M20 x 80	M16

□□□ □eeled □rolle□ □ it□ □□le For □oi□t □□traig□t □liding

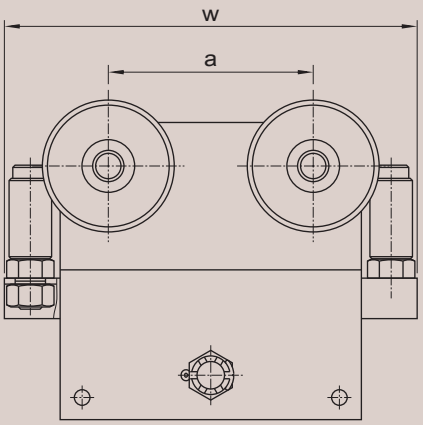

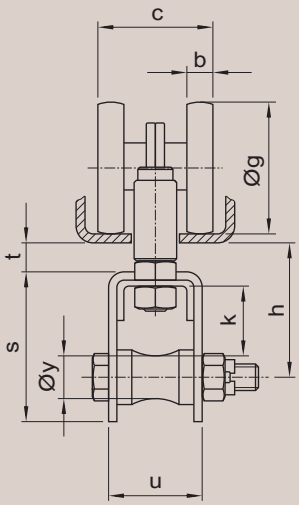

2*4.550

	F*(kg)	w	a	b	c	Øg	h	k	u	s	t	Øy
Steel wheels												
234.550	250	194	96	9.5	44	54.5	67.5	32	44	70	18.5	22
244.550	500	194	96	12	53.5	61.5	63	32	44	70	14	20
254.550	1000	214	108	12	54.5	79.2	67	33.5	49	76	13.5	20

Standard execution (100° C)	Trolleys-high temperature		Description
	Execution 150° C	Execution 300° C	
234.010	233.510	233.010	2-wheeled trolley with bolt M12
234.010/001	233.510/001	233.010/001	2-wheeled trolley with bolt M12 + higher nut
234.040	233.540	233.040	4-wheeled trolley
234.040/001	233.540/001	233.040/001	4-wheeled trolley + higher nut
244.010	243.510	243.010	2-wheeled trolley with bolt M12
244.010/001	243.510/001	243.010/001	2-wheeled trolley with bolt M12 +higher nut
244.040	243.540	243.040	4-wheeled trolley
244.040/001	243.540/001	243.040/001	4-wheeled trolley +higher nut
254.010	253.510	253.010	2-wheeled trolley with bolt M16
254.010/001	253.510/001	253.010/001	2-wheeled trolley with bolt M16 + higher nut
254.040	253.540	253.040	4-wheeled trolley
254.040/001	253.540/001	253.040/001	4-wheeled trolley + higher nut

□□□ □eeled □rolle□ □ it□ Bolt

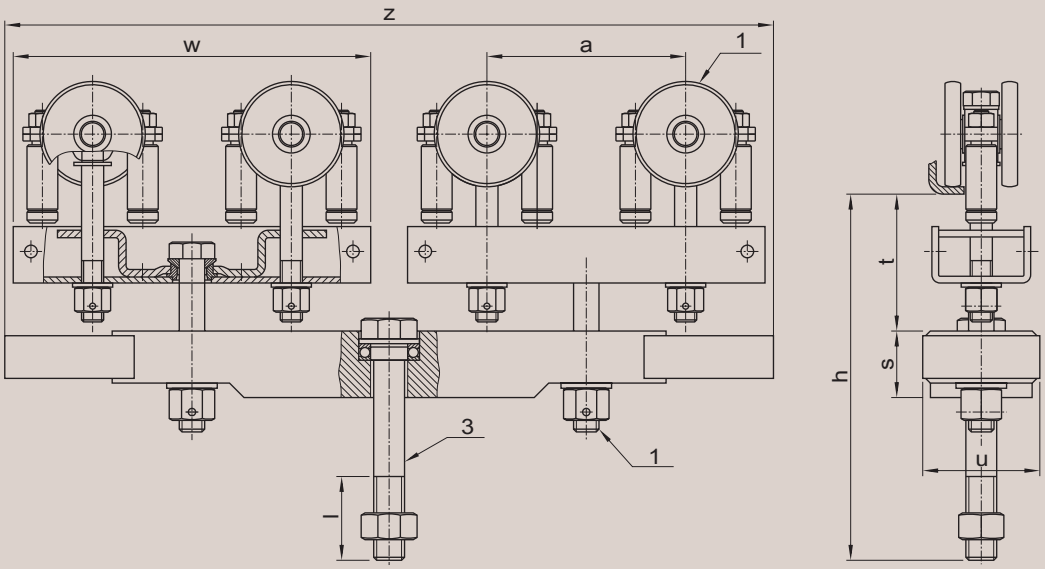

N.B.: id. for
8-wheeled trolley
with higher nut

	F*(kg)	w	a	z	u	h	l	s	t	1	2	3
Steel wheels 254.070	1800	250	140	530	80	530	56	45	100	Wheelset 254.010/1	Bolt DIN931 M20 x 120	Bolt DIN931 M22 x 150

□□□ □eeled □rolle□ For □oi□t

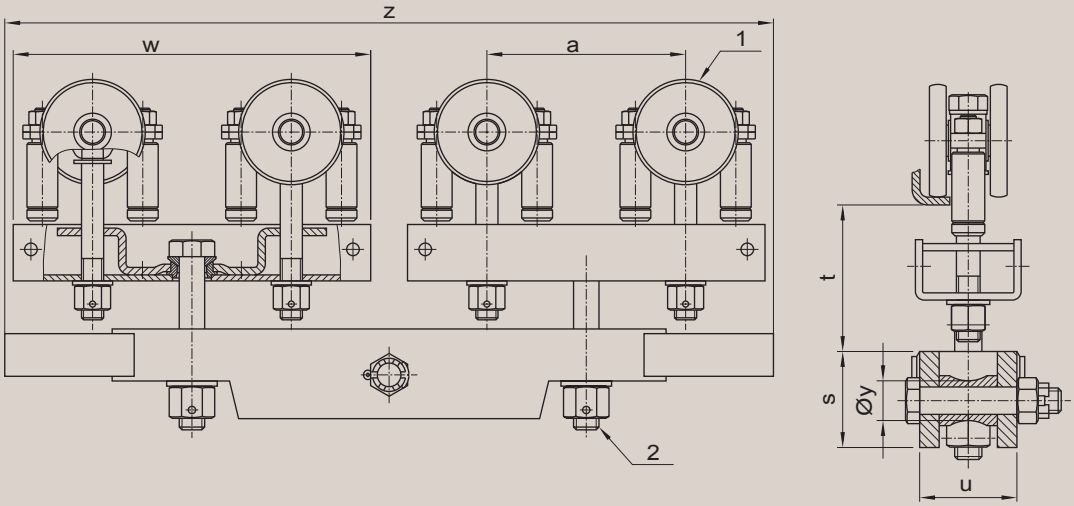

	F*(kg)	w	a	z	u	s	t	Øy	1	2
Steel wheels 254.070	1800	250	140	530	63	60	100	25	Wheelset 254.010/1	Bolt DIN931 M20 x 120

□□□ □eeled □rolle□ □ it□ □wi□el □oo□ □nd □a□et□ □atc□

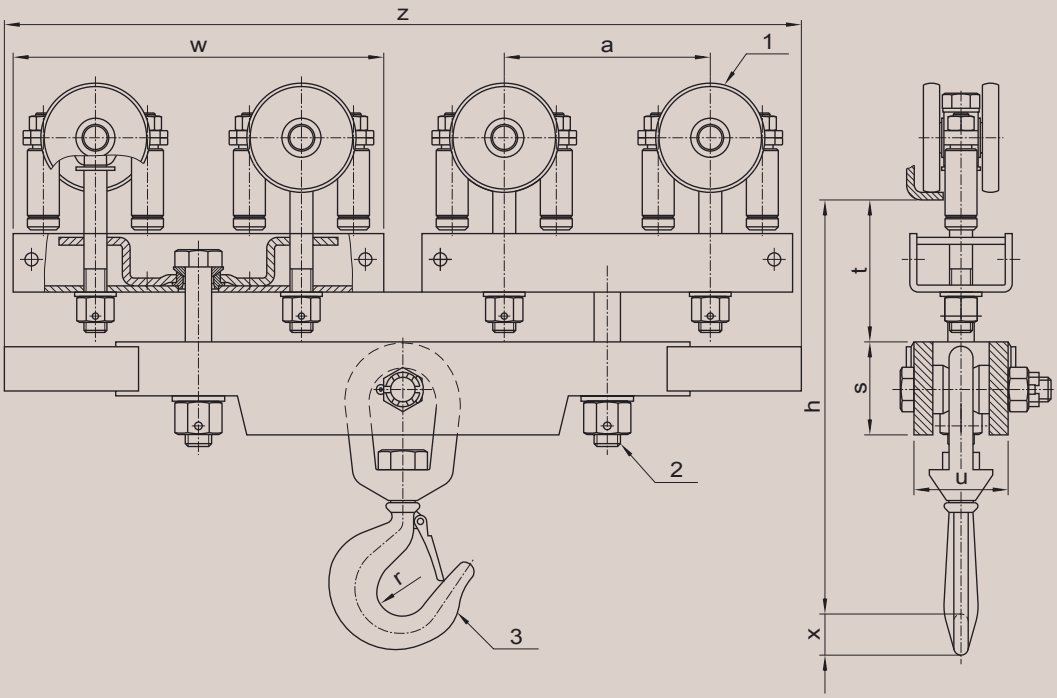

N.B.: id. for
8-wheeled trolley
with higher nut

	F*(kg)	w	a	z	u	h	r	s	t	x	1	2	3
Steel wheels											Wheelset	Bolt DIN931	Hook
254.090/006	1800	250	140	530	63	277	17	60	100	30	254.010/1	M20 x 120	254.090.006.000

E□EC□□IC □IF□□□□□ E□ DE□ICE

With a lift-lower device often called a dropsection, goods can be lifted or lowered to a man's working height; this allows the track to be installed at a higher level.
In the loading and unloading area goods can be easily handled .
A lift-lower device can be incorporated in either new or existing installations.
Lift-iower devices are also used to immerse loads.

The problem of different levels in a circuit can be solved: for special applications lift-lower devices with a vertical guide system can be installed.
The lift-lower devices are standardized for lifting capacities of 250 kg and 500 kg.
On request options for 1000 kg are available.

A lift-lower device is manufactured such that the lifting device is mounted on to the supporting structure. This supporting structure is integrated in the steelwork of the monorail circuit. Installation is by bolted flange plates directly to the support structure.

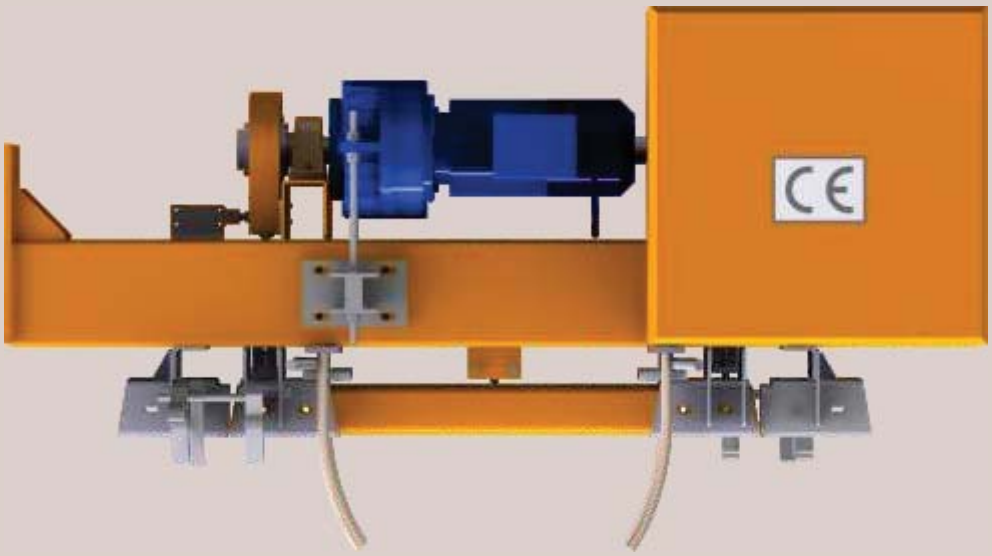

□i□t□□ower De□ice□

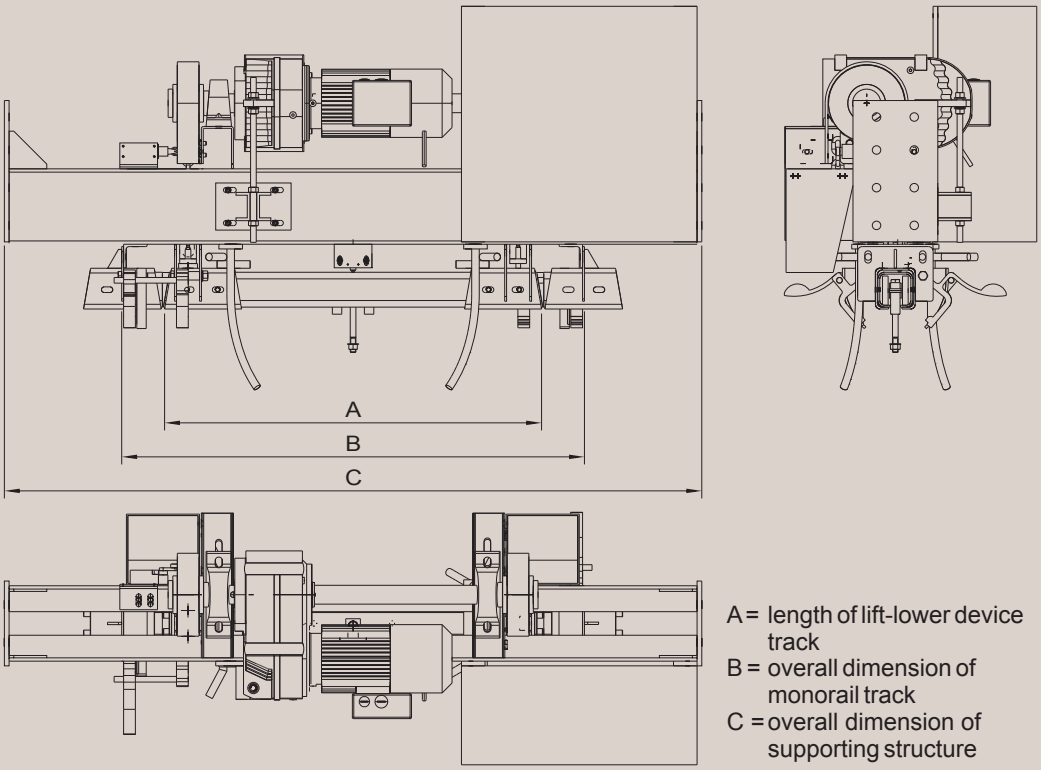

A = length of lift-lower device track
B = overall dimension of monorail track
C = overall dimension of supporting structure

Load	Series	OVERALL DIMENSIONS		
		A	B	C
250 kg	230.000	1000-1500-2000-... per 500mm	A+ 165	A+ 500
	240.000	1000-1500-2000-... per 500mm	A+ 172	A+ 500
	250.000	1000-1500-2000-... per 500mm	A+ 192	A+ 500
	2*0.000	750	942	1500
500 kg	240.000	1000-1500-2000-2500-... per 500mm	A+ 194	A+ 500
	250.000	1000-1500-2000-2500-... per 500mm	A+ 194	A+ 500

□□tion□□

- Pneumatic locking devices with control switch (pneumatic locking devices are necessary when several trolleys are positioned at the same time in the lift-lower device track)
- Connecting voltage: 400VAC 3p+N+PE, 0.75kW
- Spring-controlled positioning switch
- Alternative lifting speed (up to 10 m/min)
- Lifting height > 3,5 m
- Adjustable speed
- Detection of the trolley or the crossbeam in the lift-lower track; in this case the trolley or crossbeam is provided with a detection plate.
- EX- execution: Exd. engine, explosion-proof control device, electric box with intrinsically safe electrics (In this case the electric box should be placed outside the Ex-zone).
- Positioning device to stop the trolley in the center of the lift-lower device track.

Lift-lower devices of 1000 kg are only manufactured on request according to the specific demands of the customer.

Co□□led □i□t□□ower De□ice□

Two lift-lower devices can be coupled electrically so that both devices are controlled from one single control box and operated with one single manual pendant control.

□idewa□□ □i□t□□ower De□ice□

A cross lift-lower device is composed of two standard lift-lower device mounted in parallel

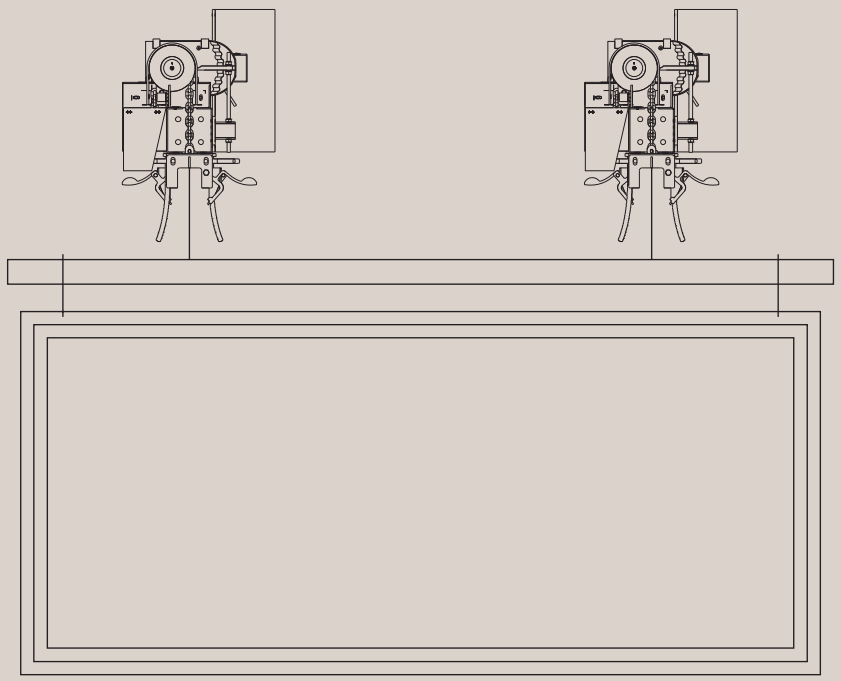

□ □i□t□□ower De□ice□ In □e□□ence

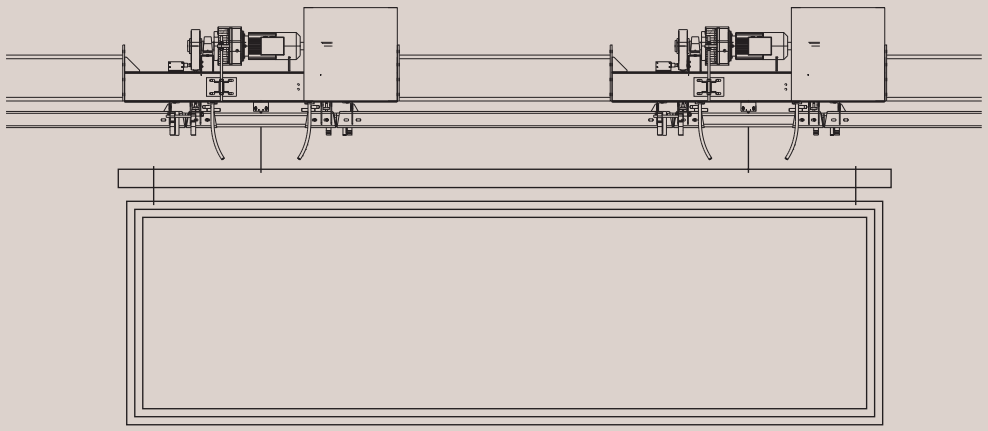

E□tended □i□t□□ower De□ice□

These extended lift-lower devices are used in a circuit where a long flightbar is used. In this case the flightbars are provided with a detection piate so that the lift-lower device only can be operated if the flightbar is correctly positioned in the track of the lift-lower device.

Zone detection on both sides of the lift-lower device also can be provided, in order to avoid collision of the flightbars while operating the lift-lower device.

Please contact our engineering department.

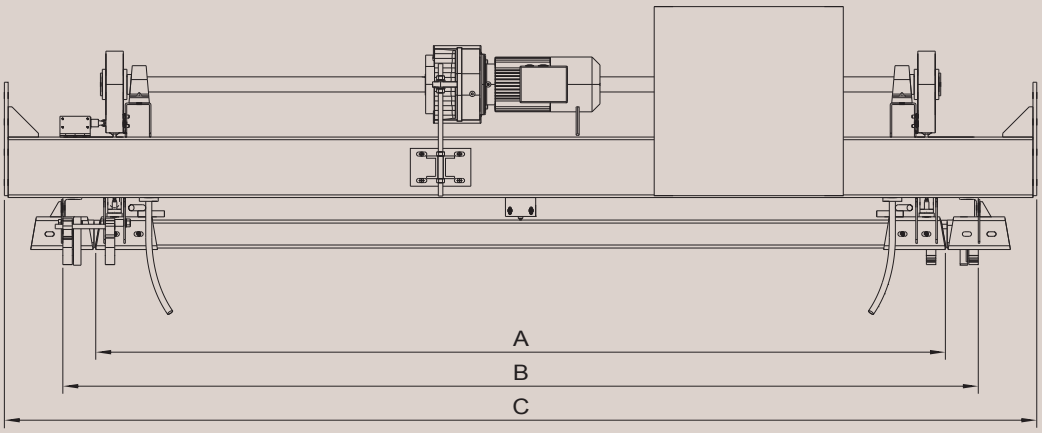

A = length of lift-lower device track
B = overall dimension of monorail track
C = overall dimension of supporting structure

An end lift-lower device consists of a track of 1 meter and a hinged track of length "L" = (see table).
With a hoist or a compressed air cylinder the hinged track can be lifted. A safety device automatically locks the track.
The length "L" has to be communicated when ordering.

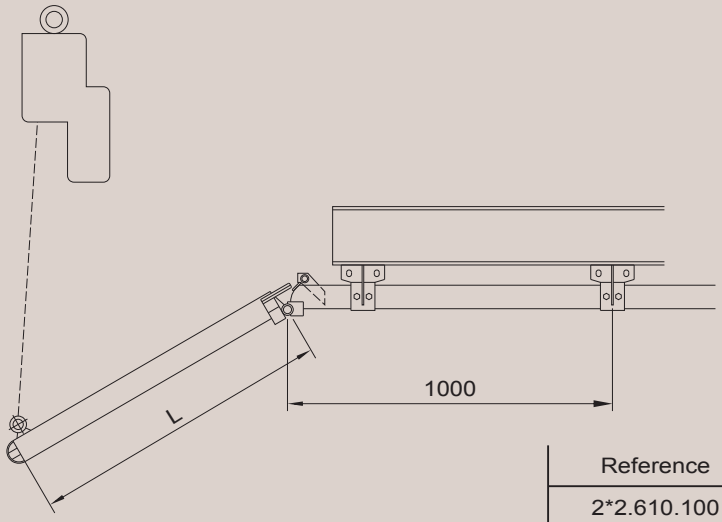

Reference	L
2*2.610.100	950
2*2.610.150	1450
2*2.610.200	1950
2*2.610.250	2450
2*2.610.300	2950
2*2.610.350	3450
2*2.610.400	3950

E□EC□□IC □IF□□□□□ E□ DE□ICE

□□

□o□itioning □i□t□□ower De□ice□ In a Circ□it

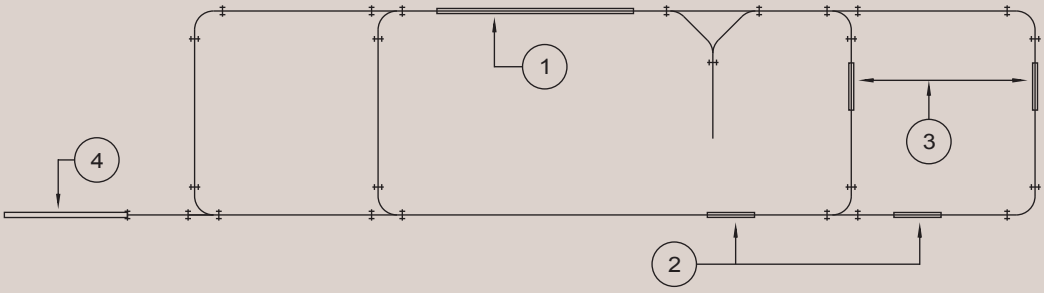

1. standard lift-lower device
2. coupled lift-lower devices in sequence
3. cross lift-lower device
4. end lift -lower device

RAILTECHNIEK VAN HERWIJNEN BV

SPECIALISTS IN OVERHEAD CONVEYORS

C□□□□IN□ B□ID□E C□□NE

In a monorail circuit a bridge crane can be mounted in order to allow the trolleys to run in parallel mounted tracks: e.g. in baking ovens or sorting areas. The bridge crane can be coupled mechanically or pneumatically.

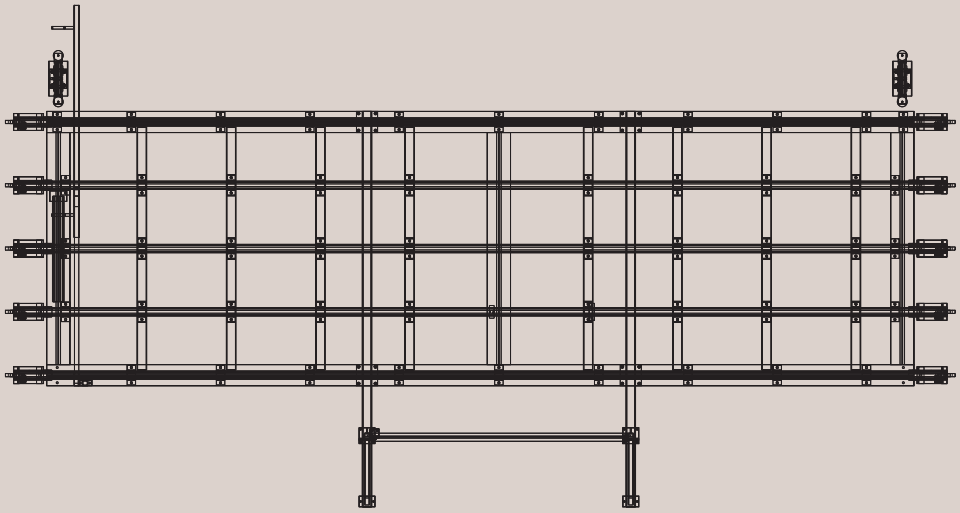

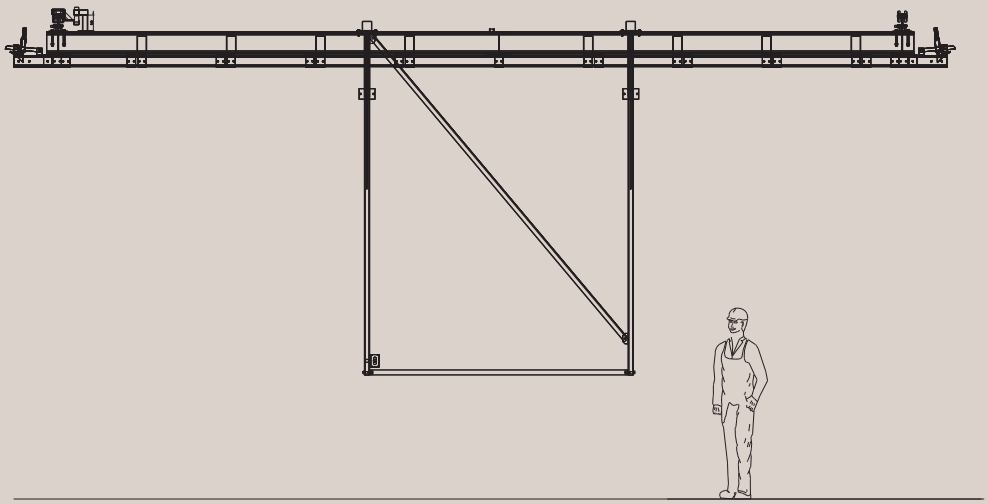

□EMI □□□□M□□ED □□□□EM□

Railtechniek have developed several systems which can be applied according to the specific need like a simple powered conveying chain or a walking beam to provide automatic feed or automatic buffering.
Our sales department can inform you about the many different standard solutions developed by Railtechniek for numerous applications.

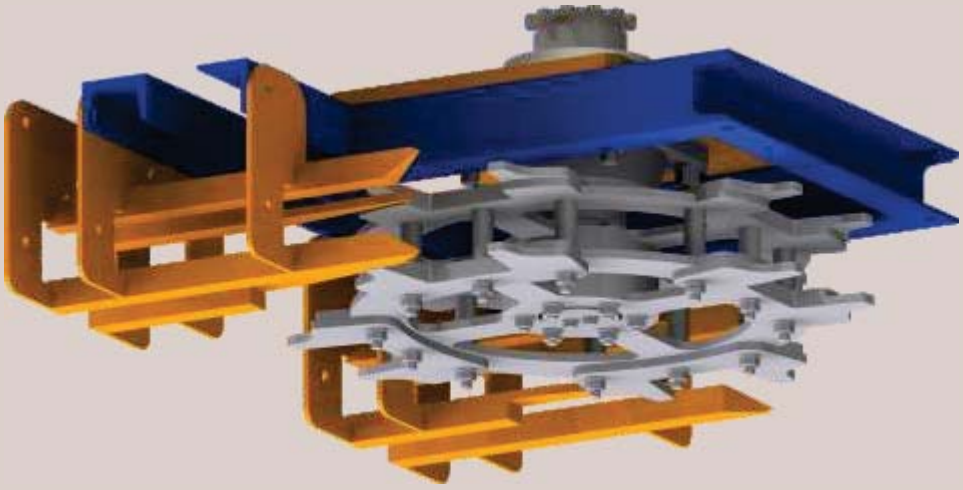

For automatization of manual monorail systems there are various options available.
Transportation is done by use of a transfer, a chain with pusherdog running next to the monorail and pushing a loadbar.
This is a cost efficient way for transportation through a spraybouth for example or the return line of empty carriers while keeping the rest of the system manual and not lose flexibility.
Railtechniek standard Teleflex D8 transfers which can be used in near endless situations applies due to its modular components.

Basic transfer example:

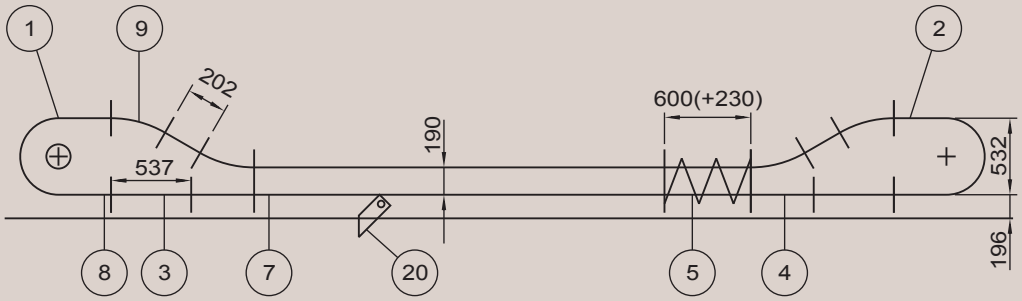

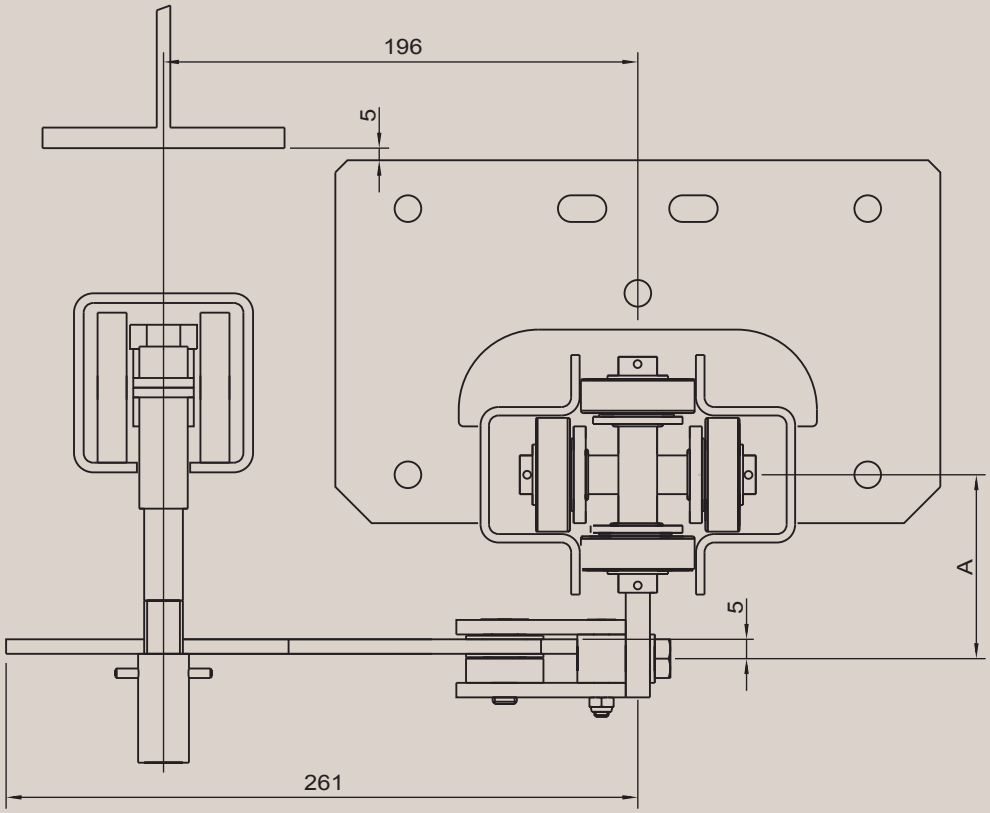

	Description	Code	Symbol	Remark
1	Drive wheel 8T	802.400	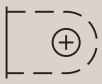	Type 1 = 0.25-1.9 m/min Type 2 = 1.9-14.9 m/min Type 3 = 0.8-6 m/min
2	Turnwheel 8T	802.405	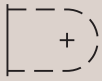	
3	In/out for 8T wheel right	802.437R		
4	In/out for 8T wheel left	802.437L		
5	Double tension rail	803.208	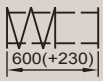	
6	Tension rail	803.209	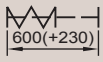	
7	Straight double track	803.008	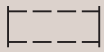	
8	Straight track	803.000		
9	Bend 30° R750	803.014		
10	Bend 45° R750	803.013		
11	Bend 90° R750	803.011		
12	Worm drive double track	803.007	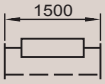	ask our engineering for motor specifications
13	Worm drive single track	803.035	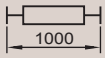	ask our engineering for motor specifications
14	Chain, till 80°C	800.302		ZZ bearings
15	Chain, till 110°C	800.303		2RS bearings
16	Chain, till 280°C	800.300		C3 bearings (open)
17	Lubrificator single track	RT-24711		
18	Lubrificator double track	RT-32477	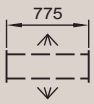	
19	Pusherdog left	RT-19307	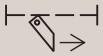	Height A to be determined
20	Pusherdog right	RT-19475	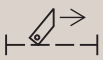	Height A to be determined

Remark concerning the chain: pitch = 203.2 mm
Pusherdog can be mounted every 406.4 mm

B□ID□E C□□NE□

□ailtec□nie□manufactures a large range of bridge cranes.
Please ask for the separate catalogue.

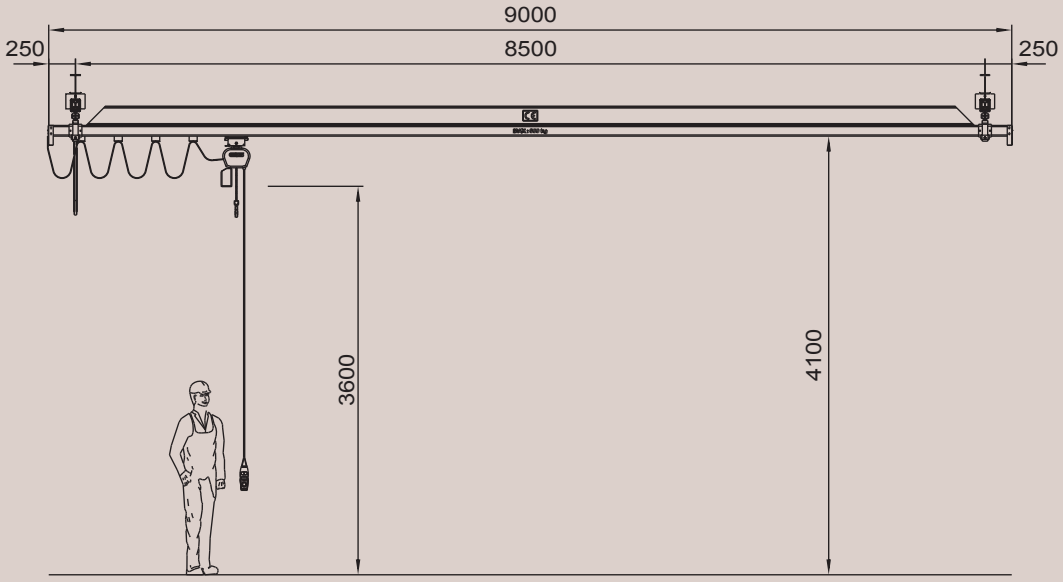

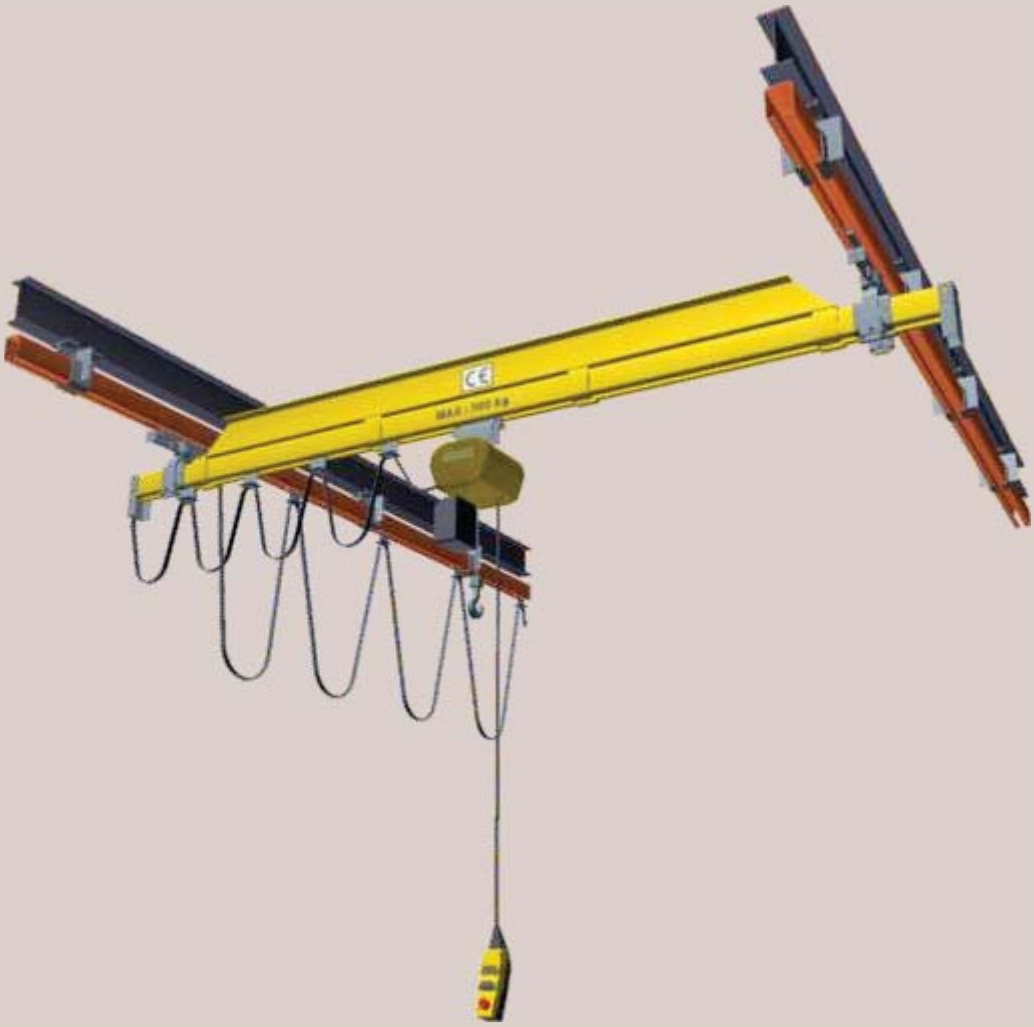

C□B□E □□ID□NCE

Railtechniek manufacturers a large range of tracks with adaptor brackets and clamps for cable guidance.
Cable guidance applies for flat as well as for tubular flexible cable. Compressed air lines are hung on specially adapted trolleys.

Please ask for the separate catalogue.

Ca□le □□idance □rolle□□

Electric ca□le
- Cable guidance trolley no 235.245 for track no 230.000
- The cable guidance trolley no 245.245 can be used in tracks no 240.000 as well as in tracks no 250.000

Track	Trolley No	L
230.000	235.245	52
230.000	235.245	52
230.000	235.245	52

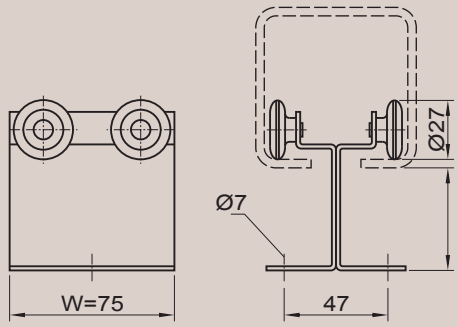

Track	Trolley No	L
230.000	235.250	52
230.000	235.255	52
230.000	235.255	52

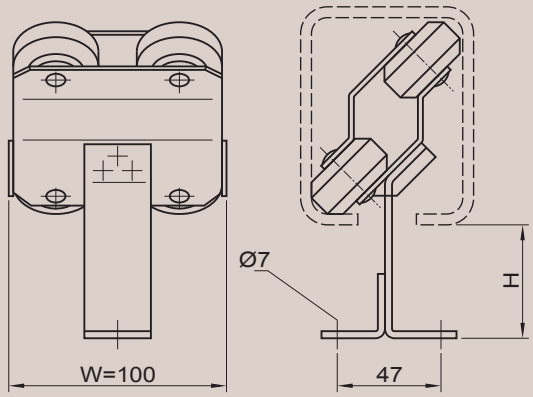

Ca□le Cla□ □□

Electric □at ca□le□cla□ □no □□□□□□□□
max. cable width 40 mm

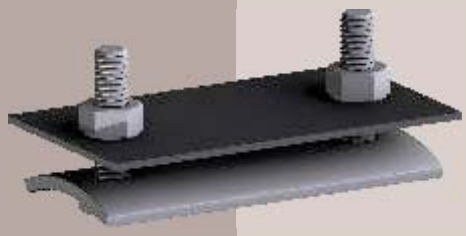

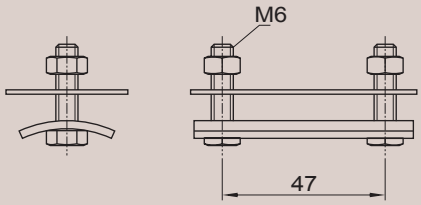

Co□ □re□□ed air line
- Hose diameter minimum 10 mm maximum 18 mm — Clamp no. 417.110
- Hose diameter minimum 20 mm maximum 25 mm — Clamp no. 417.120

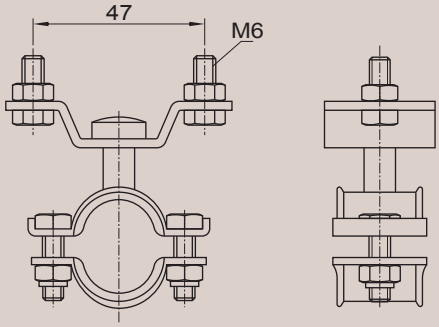

Calc□lation

□□e □ollowing ta□le □el□□□□□□□□□□ □□□□□□□□□□ □□ □□□□□□□□□□□□□□□□□□□□□

- For an effective runway of a trolley (Ln) < 30 m, the values of n and LK are detailed.

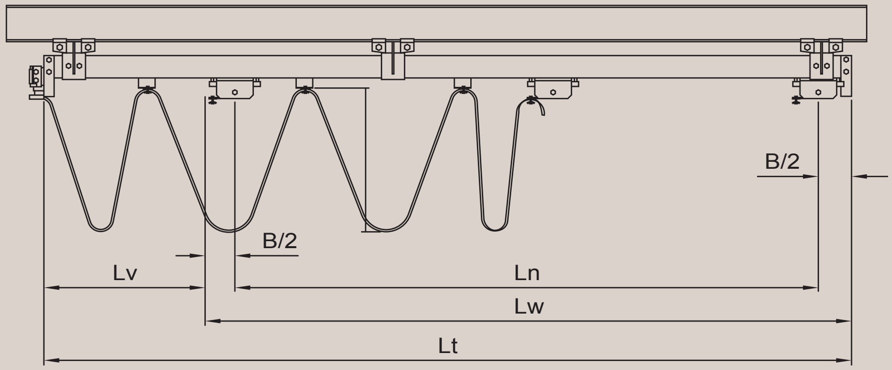

Track length Ln	Cable length LK	Number of cable guidance trolley (n) for a loop height A (m) 0.5	0.63	0.8	1.0
5	7.5	5	4	3	2
6	8.6	6	5	4	3
7	9.7	7	6	4	3
8	10.8	8	6	5	4
9	11.9	9	7	6	4
10	13.0	10	8	6	5
11	14.1	12	9	7	6
12	15.2	13	10	8	6
13	16.3	14	11	8	7
14	17.4	15	12	9	7
15	18.5	16	13	10	8
16	19.6	17	13	10	8
17	20.7	18	14	11	9
18	21.8	19	15	12	9
19	22.9	20	16	13	10
20	24.0	21	17	13	10
21	25.1	23	18	14	11
22	26.2	24	19	15	12
23	27.3	25	20	15	12
24	28.4	26	20	16	13
25	29.5	27	21	17	13
26	30.6	28	22	17	14
27	31.7	29	23	18	14
28	32.8	30	24	19	15
29	33.9	31	25	19	15
	35.0	32	26	20	16

-For an effective runway of the trolley (Ln) ? 30 m the values of n and LK are calculated as follows:

$$n = \frac{Ln \times C}{2 \times A} - 1$$

n = number of cable guidance trolleys A: Loop height C: Coefficient

Height of the loop (m): A	0.5	0.63	0.8	1.0
Coefficient C	1.1	1.08	1.065	1.05

LK = LT x 1.1 + 2 m	LK : Cable length
LT = Lw + Lv	LT : Total length of the track
Lw = Ln + B	Lw : Length of the runway
	B : Width of the trolley
Lv = n x w	Lv : Required space for the cable guidance trolleys
	w : Width of the cable guidance trolley

RAILTECHNIEK VAN HERWIJNEN B.V.

THE NETHERLANDS

TELEFLEX B.V.

THE NETHERLANDS

RAILTECHNIQUE FRANCE SARL

FRANCE

TFX-RAILTECHNIK GmbH

GERMANY

STEWART GILL CONVEYORS LTD.

ENGLAND

RAILTECHNIQUE SRL MOLDOVA

MOLDOVA

RAILTECHNIEK VAN HERWIJNEN BV

SPECIALISTS IN OVERHEAD CONVEYORS

Head office

Engineering

Fabrication

Assembling

Electrical steering department

Service

Who is RAILTECHNIEK?

Railtechniek van Herwijnen BV is an independent global company, specializing since their foundation in 1983 in the production and installation of Overhead Conveyors components and systems. The company designs, manufactures and installs only under international approved standards.

For ancillary equipment such as electric switches, pneumatic, PLC's, bearings etc. we only use international suppliers who can meet with our standards. After the completion and sign off of the system by the customer a fully detailed manual inclusive of maintenance and operation instructions is supplied. After sales service & maintenance contracts are offered (subject to a separate contract). All PLC control systems use a modem connection with our 24-hour helpdesk. This is included as standard.

RAILTECHNIEK VAN HERWIJNEN B.V.

Koelenhofstraat 13
4004-JR TIEL - THE NETHERLANDS
PO Box 6223
4000 HE TIEL - THE NETHERLANDS
Telephone: +31 (0) 344-61 63 63
Facsimilie: +31 (0) 344-61 10 72
E-mail: info@raitechniek.nl
Internet: www.raitechniek.nl

Our European subsidiaries:

- RAILTECHNIEK VAN HERWIJNEN B.V.
- RAILTECHNIQUE FRANCE S.A.R.L
- TFX-RAILTECHNIK GmbH
- RAILTECHNIQUE S.R.L MOLDOVA
- STEWART GILL CONVEYORS LTD.
- TELEFLEX B.V.
- DUNNEWOLT B.V.